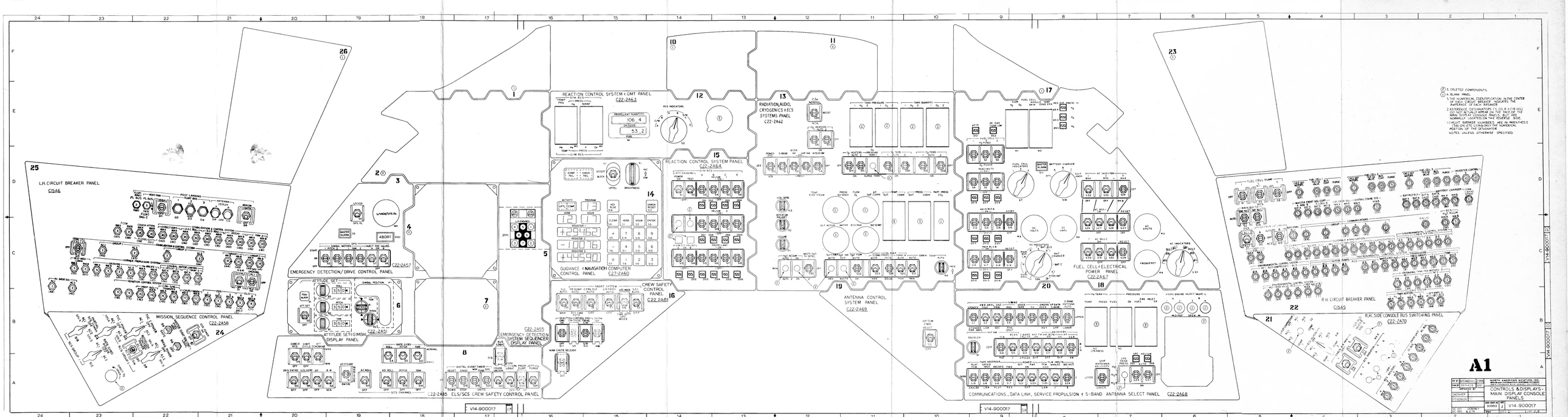
REACTION CONTROL SYSTEM & GMT PANEL
C22-2463
REACTION CONTROL SYSTEM PANEL
C22-2464
RADIATION, AUDIO, CRYOGENICS & ECS SYSTEMS PANEL
C22-2462
L.H. CIRCUIT BREAKER PANEL
C15A6
MISSION SEQUENCE CONTROL PANEL
C22-2458
EMERGENCY DETECTION/DRIVE CONTROL PANEL
C22-2457
GUIDANCE & NAVIGATION COMPUTER CONTROL PANEL
C27-2460
CREW SAFETY CONTROL PANEL
C22-2461
ANTENNA CONTROL SYSTEM PANEL
C22-2469
FUEL CELL & ELECTRICAL POWER PANEL
C22-2467
R.H. CIRCUIT BREAKER PANEL
C15A5
R.H. SIDE CONSOLE BUS SWITCHING PANEL
C22-2470
ATTITUDE SET/GIMBAL DISPLAY PANEL
C22-2451
EMERGENCY DETECTION SYSTEM SEQUENCER DISPLAY PANEL
C22-2455
C22-2485 ELS/SCS CREW SAFETY CONTROL PANEL
COMMUNICATIONS, DATA LINK, SERVICE PROPULSION & S-BAND ANTENNA SELECT PANEL C22-2468
V14-900017
A1
CONTROLS & DISPLAYS - MAIN DISPLAY CONSOLE PANELS
NORTH AMERICAN AVIATION, INC.
SPACE & INFORMATION SYSTEMS DIVISION
SIZE A1
CODE IDENT NO 93953
SCALE 1/2
V14-900017
SHEET 1 OF 1

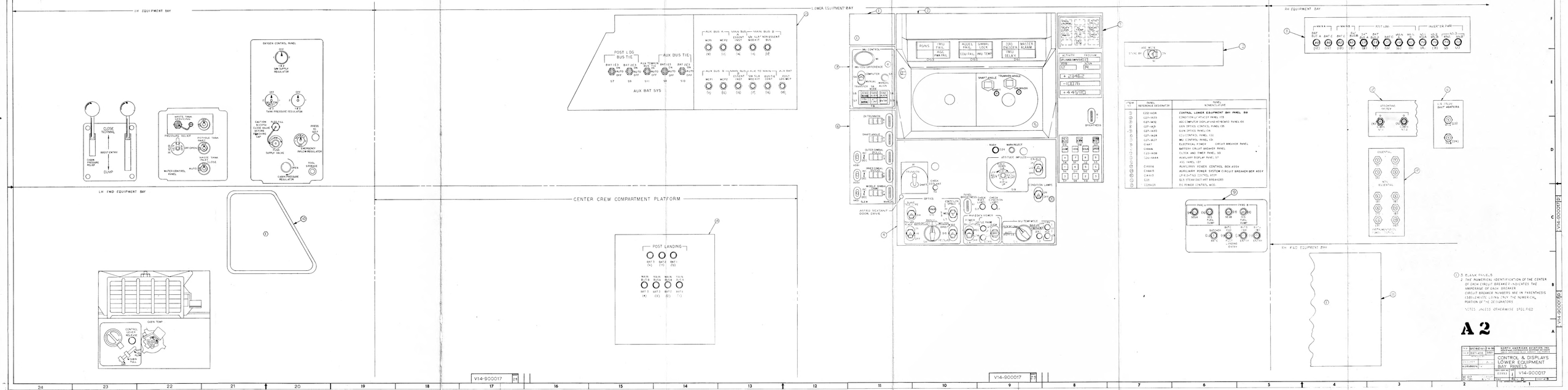

ITEM NO	PANEL REFERENCE DESIGNATOR	PANEL NOMENCLATURE
		CONTROL LOWER EQUIPMENT BAY PANEL 8B
1	C27-1A1A	CONDITION LIGHT ASSY PANEL 1B
2	C27-1A1B	ADC COMPUTER DISPLAY AND KEYBOARD PANEL 1B
3	C27-1A3	GEN OPTICS CONTROL PANEL 1B
4	C27-1A3D	GEN OPTICS PANEL 1A
5	C27-1A2A	EGC CONTROL PANEL 1B
6	C27-1A2B	IMU CONTROL PANEL 1B
7	C27-1A2C	ELECTRICAL POWER CIRCUIT BREAKER PANEL
8	C1A17	BATTERY CIRCUIT BREAKER PANEL
9	C1A1A	CLOCK AND TIMER PANEL 9B
10	C2D1A2B	AUXILIARY DISPLAY PANEL 5T
11	C2E1-A4A4A	ADC PANEL 1B
12	C1A1A1A	AUXILIARY POWER CONTROL BOX ASSY
13	C1A1A1B	AUXILIARY POWER SYSTEM CIRCUIT BREAKER BOX ASSY
14	C1A1B	LPR ENTRY CONTROL ASSY
15	C2E	ELS TEMP SHUT OFF BREAKERS
16	C2E4-1B	DC POWER CONTROL MOD.

1. 3 BLANK PANELS
2. THE NUMERICAL IDENTIFICATION OF THE CENTER OF EACH CIRCUIT BREAKER INDICATES THE AMPERAGE OF EACH BREAKER. CIRCUIT BREAKER NUMBERS ARE IN PARENTHESIS (3B1L2A1E, USING ONLY THE NUMERICAL PORTION OF THE DESIGNATORS.

NOTES UNLESS OTHERWISE SPECIFIED

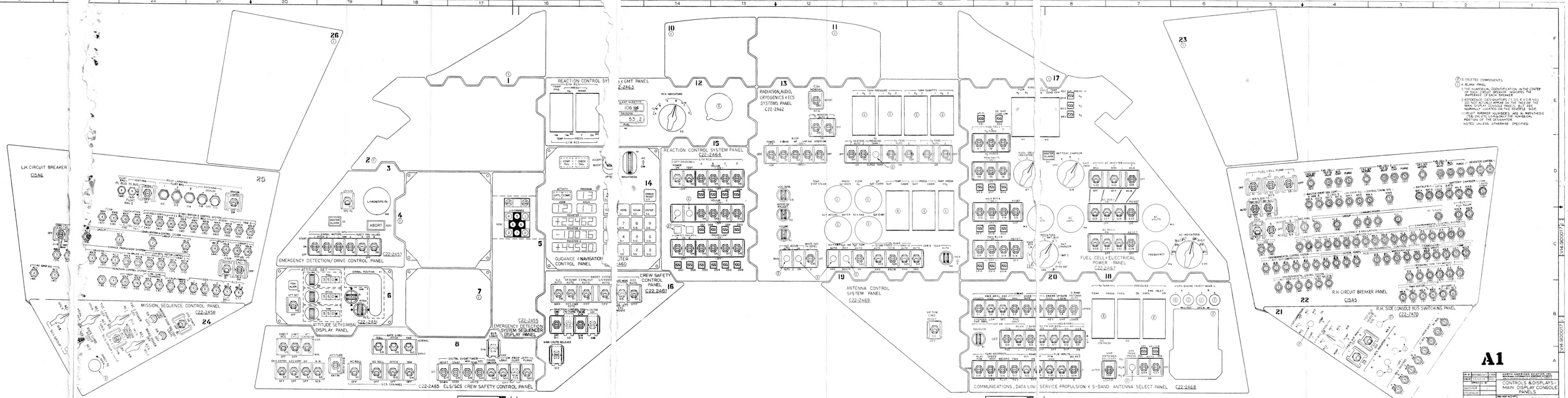
L.H. CIRCUIT BREAKER
C15A6
MISSION SEQUENCE CONTROL PANEL
C22-2A58
EMERGENCY DETECTION/DRIVE CONTROL PANEL
C22-2A57
ATTITUDE SET/GIMBAL DISPLAY PANEL
C22-2A51
EMERGENCY DETECTION SYSTEM SEQUENCER DISPLAY PANEL
C22-2A55
ELS/SCS CREW SAFETY CONTROL PANEL
C22-2A85
REACTION CONTROL SYSTEM PANEL
C22-2A64
GUIDANCE & NAVIGATION CONTROL PANEL
CREW SAFETY CONTROL PANEL
C22-2A61
RADIATION, AUDIO, CRYOGENICS & ECS SYSTEMS PANEL
C22-2A62
ANTENNA CONTROL SYSTEM PANEL
C22-2A69
FUEL CELL & ELECTRICAL POWER PANEL
C22-2A67
COMMUNICATIONS, DATA LINK & SERVICE PROPULSION & S-BAND ANTENNA SELECT PANEL
C22-2A68
R.H. CIRCUIT BREAKER PANEL
C15A5
R.H. SIDE CONSOLE BUS SWITCHING PANEL
C22-2A70
V14-900017
A1
NORTH AMERICAN AVIATION, INC.
SPACE & INFORMATION SYSTEMS DIVISION
CONTROLS & DISPLAYS - MAIN DISPLAY CONSOLE PANELS
V14-900017

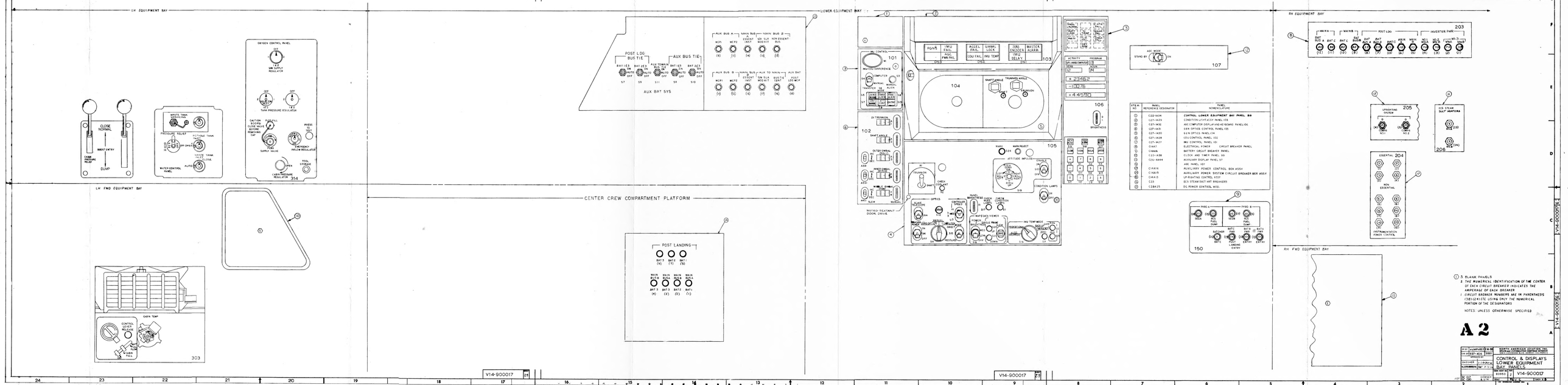
LH EQUIPMENT BAY
LOWER EQUIPMENT BAY
RH EQUIPMENT BAY
LH FWD EQUIPMENT BAY
CENTER CREW COMPARTMENT PLATFORM
RH FWD EQUIPMENT BAY
CLOSE NORMAL
BOOST ENTRY
TANK PRESSURE RELIEF
DUMP
WASTE TANK
PRESSURE RELIEF
POTABLE TANK
WATER CONTROL PANEL
OXYGEN CONTROL PANEL
SUPPLY VALVE
TANK PRESSURE REGULATOR
CABIN PRESSURE REGULATOR
EMERGENCY INFLOW REGULATOR
TOOL STORAGE
314
POST LDG BUS TIE
AUX BUS TIE
AUX BAT SYS
AUX BUS A
MAIN BUS A
MAIN BUS B
AUX BUS B
MAIN BUS ESSENT INST
SW SLA MODAT
NON ESSENT BUS
AUX TO MAIN
AUX BAT
POST LDG MCF
MCP1
MCP2
MCP3
MCP4
MCP5
MCP6
MCP7
MCP8
MCP9
MCP10
MCP11
MCP12
MCP13
MCP14
MCP15
MCP16
MCP17
MCP18
MCP19
MCP20
MCP21
MCP22
MCP23
MCP24
MCP25
MCP26
MCP27
MCP28
MCP29
MCP30
MCP31
MCP32
MCP33
MCP34
MCP35
MCP36
MCP37
MCP38
MCP39
MCP40

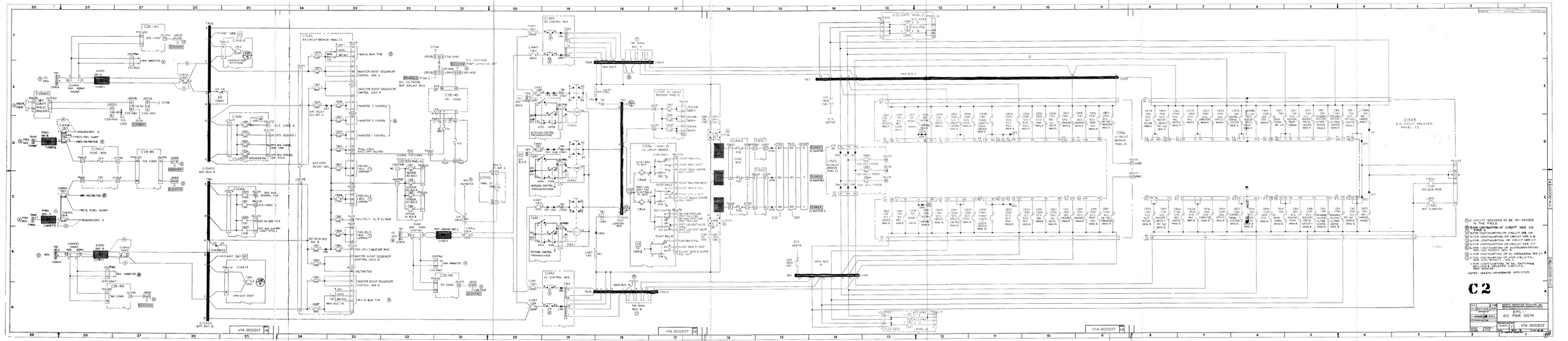
C1S4S
RH CIRCUIT BREAKER PANEL E2
C1S4R
LH CIRCUIT BREAKER PANEL E1
C1S4Q
RH CIRCUIT BREAKER PANEL S1
C1S4P
LH CIRCUIT BREAKER PANEL S1
C1S4N
RH CIRCUIT BREAKER PANEL S2
C1S4M
LH CIRCUIT BREAKER PANEL S2
C1S4L
RH CIRCUIT BREAKER PANEL 1
C1S4K
LH CIRCUIT BREAKER PANEL 1
C1S4J
RH CIRCUIT BREAKER PANEL 2
C1S4H
LH CIRCUIT BREAKER PANEL 2
C1S4G
RH CIRCUIT BREAKER PANEL 3
C1S4F
LH CIRCUIT BREAKER PANEL 3
C1S4E
RH CIRCUIT BREAKER PANEL 4
C1S4D
LH CIRCUIT BREAKER PANEL 4
C1S4C
RH CIRCUIT BREAKER PANEL 5
C1S4B
LH CIRCUIT BREAKER PANEL 5
C1S4A
RH CIRCUIT BREAKER PANEL 6
C1S4
LH CIRCUIT BREAKER PANEL 6
C1S4T
RH CIRCUIT BREAKER PANEL 7
C1S4S
LH CIRCUIT BREAKER PANEL 7
C1S4R
RH CIRCUIT BREAKER PANEL 8
C1S4Q
LH CIRCUIT BREAKER PANEL 8
C1S4P
RH CIRCUIT BREAKER PANEL 9
C1S4N
LH CIRCUIT BREAKER PANEL 9
C1S4M
RH CIRCUIT BREAKER PANEL 10
C1S4L
LH CIRCUIT BREAKER PANEL 10
C1S4K
RH CIRCUIT BREAKER PANEL 11
C1S4J
LH CIRCUIT BREAKER PANEL 11
C1S4H
RH CIRCUIT BREAKER PANEL 12
C1S4G
LH CIRCUIT BREAKER PANEL 12
C1S4F
RH CIRCUIT BREAKER PANEL 13
C1S4E
LH CIRCUIT BREAKER PANEL 13
C1S4D
RH CIRCUIT BREAKER PANEL 14
C1S4C
LH CIRCUIT BREAKER PANEL 14
C1S4B
RH CIRCUIT BREAKER PANEL 15
C1S4A
LH CIRCUIT BREAKER PANEL 15
C1S4
RH CIRCUIT BREAKER PANEL 16
C1S4T
LH CIRCUIT BREAKER PANEL 16
C1S4R
RH CIRCUIT BREAKER PANEL 17
C1S4Q
LH CIRCUIT BREAKER PANEL 17
C1S4P
RH CIRCUIT BREAKER PANEL 18
C1S4N
LH CIRCUIT BREAKER PANEL 18
C1S4M
RH CIRCUIT BREAKER PANEL 19
C1S4L
LH CIRCUIT BREAKER PANEL 19
C1S4K
RH CIRCUIT BREAKER PANEL 20
C1S4J
LH CIRCUIT BREAKER PANEL 20
C1S4H
RH CIRCUIT BREAKER PANEL 21
C1S4G
LH CIRCUIT BREAKER PANEL 21
C1S4F
RH CIRCUIT BREAKER PANEL 22
C1S4E
LH CIRCUIT BREAKER PANEL 22
C1S4D
RH CIRCUIT BREAKER PANEL 23
C1S4C
LH CIRCUIT BREAKER PANEL 23
C1S4B
RH CIRCUIT BREAKER PANEL 24
C1S4A
LH CIRCUIT BREAKER PANEL 24
C1S4
RH CIRCUIT BREAKER PANEL 25
C1S4T
LH CIRCUIT BREAKER PANEL 25
C1S4R
RH CIRCUIT BREAKER PANEL 26
C1S4Q
LH CIRCUIT BREAKER PANEL 26
C1S4P
RH CIRCUIT BREAKER PANEL 27
C1S4N
LH CIRCUIT BREAKER PANEL 27
C1S4M
RH CIRCUIT BREAKER PANEL 28
C1S4L
LH CIRCUIT BREAKER PANEL 28
C1S4K
RH CIRCUIT BREAKER PANEL 29
C1S4J
LH CIRCUIT BREAKER PANEL 29
C1S4H
RH CIRCUIT BREAKER PANEL 30
C1S4G
LH CIRCUIT BREAKER PANEL 30
C1S4F
RH CIRCUIT BREAKER PANEL 31
C1S4E
LH CIRCUIT BREAKER PANEL 31
C1S4D
RH CIRCUIT BREAKER PANEL 32
C1S4C
LH CIRCUIT BREAKER PANEL 32
C1S4B
RH CIRCUIT BREAKER PANEL 33
C1S4A
LH CIRCUIT BREAKER PANEL 33
C1S4
RH CIRCUIT BREAKER PANEL 34
C1S4T
LH CIRCUIT BREAKER PANEL 34
C1S4R
RH CIRCUIT BREAKER PANEL 35
C1S4Q
LH CIRCUIT BREAKER PANEL 35
C1S4P
RH CIRCUIT BREAKER PANEL 36
C1S4N
LH CIRCUIT BREAKER PANEL 36
C1S4M
RH CIRCUIT BREAKER PANEL 37
C1S4L
LH CIRCUIT BREAKER PANEL 37
C1S4K
RH CIRCUIT BREAKER PANEL 38
C1S4J
LH CIRCUIT BREAKER PANEL 38
C1S4H
RH CIRCUIT BREAKER PANEL 39
C1S4G
LH CIRCUIT BREAKER PANEL 39
C1S4F
RH CIRCUIT BREAKER PANEL 40
C1S4E
LH CIRCUIT BREAKER PANEL 40
C1S4D
RH CIRCUIT BREAKER PANEL 41
C1S4C
LH CIRCUIT BREAKER PANEL 41
C1S4B
RH CIRCUIT BREAKER PANEL 42
C1S4A
LH CIRCUIT BREAKER PANEL 42
C1S4
RH CIRCUIT BREAKER PANEL 43
C1S4T
LH CIRCUIT BREAKER PANEL 43
C1S4R
RH CIRCUIT BREAKER PANEL 44
C1S4Q
LH CIRCUIT BREAKER PANEL 44
C1S4P
RH CIRCUIT BREAKER PANEL 45
C1S4N
LH CIRCUIT BREAKER PANEL 45
C1S4M
RH CIRCUIT BREAKER PANEL 46
C1S4L
LH CIRCUIT BREAKER PANEL 46
C1S4K
RH CIRCUIT BREAKER PANEL 47
C1S4J
LH CIRCUIT BREAKER PANEL 47
C1S4H
RH CIRCUIT BREAKER PANEL 48
C1S4G
LH CIRCUIT BREAKER PANEL 48
C1S4F
RH CIRCUIT BREAKER PANEL 49
C1S4E
LH CIRCUIT BREAKER PANEL 49
C1S4D
RH CIRCUIT BREAKER PANEL 50
C1S4C
LH CIRCUIT BREAKER PANEL 50
C1S4B
RH CIRCUIT BREAKER PANEL 51
C1S4A
LH CIRCUIT BREAKER PANEL 51
C1S4
RH CIRCUIT BREAKER PANEL 52
C1S4T
LH CIRCUIT BREAKER PANEL 52
C1S4R
RH CIRCUIT BREAKER PANEL 53
C1S4Q
LH CIRCUIT BREAKER PANEL 53
C1S4P
RH CIRCUIT BREAKER PANEL 54
C1S4N
LH CIRCUIT BREAKER PANEL 54
C1S4M
RH CIRCUIT BREAKER PANEL 55
C1S4L
LH CIRCUIT BREAKER PANEL 55
C1S4K
RH CIRCUIT BREAKER PANEL 56
C1S4J
LH CIRCUIT BREAKER PANEL 56
C1S4H
RH CIRCUIT BREAKER PANEL 57
C1S4G
LH CIRCUIT BREAKER PANEL 57
C1S4F
RH CIRCUIT BREAKER PANEL 58
C1S4E
LH CIRCUIT BREAKER PANEL 58
C1S4D
RH CIRCUIT BREAKER PANEL 59
C1S4C
LH CIRCUIT BREAKER PANEL 59
C1S4B
RH CIRCUIT BREAKER PANEL 60
C1S4A
LH CIRCUIT BREAKER PANEL 60
C1S4
RH CIRCUIT BREAKER PANEL 61
C1S4T
LH CIRCUIT BREAKER PANEL 61
C1S4R
RH CIRCUIT BREAKER PANEL 62
C1S4Q
LH CIRCUIT BREAKER PANEL 62
C1S4P
RH CIRCUIT BREAKER PANEL 63
C1S4N
LH CIRCUIT BREAKER PANEL 63
C1S4M
RH CIRCUIT BREAKER PANEL 64
C1S4L
LH CIRCUIT BREAKER PANEL 64
C1S4K
RH CIRCUIT BREAKER PANEL 65
C1S4J
LH CIRCUIT BREAKER PANEL 65
C1S4H
RH CIRCUIT BREAKER PANEL 66
C1S4G
LH CIRCUIT BREAKER PANEL 66
C1S4F
RH CIRCUIT BREAKER PANEL 67
C1S4E
LH CIRCUIT BREAKER PANEL 67
C1S4D
RH CIRCUIT BREAKER PANEL 68
C1S4C
LH CIRCUIT BREAKER PANEL 68
C1S4B
RH CIRCUIT BREAKER PANEL 69
C1S4A
LH CIRCUIT BREAKER PANEL 69
C1S4
RH CIRCUIT BREAKER PANEL 70
C1S4T
LH CIRCUIT BREAKER PANEL 70
C1S4R
RH CIRCUIT BREAKER PANEL 71
C1S4Q
LH CIRCUIT BREAKER PANEL 71
C1S4P
RH CIRCUIT BREAKER PANEL 72
C1S4N
LH CIRCUIT BREAKER PANEL 72
C1S4M
RH CIRCUIT BREAKER PANEL 73
C1S4L
LH CIRCUIT BREAKER PANEL 73
C1S4K
RH CIRCUIT BREAKER PANEL 74
C1S4J
LH CIRCUIT BREAKER PANEL 74
C1S4H
RH CIRCUIT BREAKER PANEL 75
C1S4G
LH CIRCUIT BREAKER PANEL 75
C1S4F
RH CIRCUIT BREAKER PANEL 76
C1S4E
LH CIRCUIT BREAKER PANEL 76
C1S4D
RH CIRCUIT BREAKER PANEL 77
C1S4C
LH CIRCUIT BREAKER PANEL 77
C1S4B
RH CIRCUIT BREAKER PANEL 78
C1S4A
LH CIRCUIT BREAKER PANEL 78
C1S4
RH CIRCUIT BREAKER PANEL 79
C1S4T
LH CIRCUIT BREAKER PANEL 79
C1S4R
RH CIRCUIT BREAKER PANEL 80
C1S4Q
LH CIRCUIT BREAKER PANEL 80
C1S4P
RH CIRCUIT BREAKER PANEL 81
C1S4N
LH CIRCUIT BREAKER PANEL 81
C1S4M
RH CIRCUIT BREAKER PANEL 82
C1S4L
LH CIRCUIT BREAKER PANEL 82
C1S4K
RH CIRCUIT BREAKER PANEL 83
C1S4J
LH CIRCUIT BREAKER PANEL 83
C1S4H
RH CIRCUIT BREAKER PANEL 84
C1S4G
LH CIRCUIT BREAKER PANEL 84
C1S4F
RH CIRCUIT BREAKER PANEL 85
C1S4E
LH CIRCUIT BREAKER PANEL 85
C1S4D
RH CIRCUIT BREAKER PANEL 86
C1S4C
LH CIRCUIT BREAKER PANEL 86
C1S4B
RH CIRCUIT BREAKER PANEL 87
C1S4A
LH CIRCUIT BREAKER PANEL 87
C1S4
RH CIRCUIT BREAKER PANEL 88
C1S4T
LH CIRCUIT BREAKER PANEL 88
C1S4R
RH CIRCUIT BREAKER PANEL 89
C1S4Q
LH CIRCUIT BREAKER PANEL 89
C1S4P
RH CIRCUIT BREAKER PANEL 90
C1S4N
LH CIRCUIT BREAKER PANEL 90
C1S4M
RH CIRCUIT BREAKER PANEL 91
C1S4L
LH CIRCUIT BREAKER PANEL 91
C1S4K
RH CIRCUIT BREAKER PANEL 92
C1S4J
LH CIRCUIT BREAKER PANEL 92
C1S4H
RH CIRCUIT BREAKER PANEL 93
C1S4G
LH CIRCUIT BREAKER PANEL 93
C1S4F
RH CIRCUIT BREAKER PANEL 94
C1S4E
LH CIRCUIT BREAKER PANEL 94
C1S4D
RH CIRCUIT BREAKER PANEL 95
C1S4C
LH CIRCUIT BREAKER PANEL 95
C1S4B
RH CIRCUIT BREAKER PANEL 96
C1S4A
LH CIRCUIT BREAKER PANEL 96
C1S4
RH CIRCUIT BREAKER PANEL 97
C1S4T
LH CIRCUIT BREAKER PANEL 97
C1S4R
RH CIRCUIT BREAKER PANEL 98
C1S4Q
LH CIRCUIT BREAKER PANEL 98
C1S4P
RH CIRCUIT BREAKER PANEL 99
C1S4N
LH CIRCUIT BREAKER PANEL 99
C1S4M
RH CIRCUIT BREAKER PANEL 100
C1S4L
LH CIRCUIT BREAKER PANEL 100
C1S4K
RH CIRCUIT BREAKER PANEL 101
C1S4J
LH CIRCUIT BREAKER PANEL 101
C1S4H
RH CIRCUIT BREAKER PANEL 102
C1S4G
LH CIRCUIT BREAKER PANEL 102
C1S4F
RH CIRCUIT BREAKER PANEL 103
C1S4E
LH CIRCUIT BREAKER PANEL 103
C1S4D
RH CIRCUIT BREAKER PANEL 104
C1S4C
LH CIRCUIT BREAKER PANEL 104
C1S4B
RH CIRCUIT BREAKER PANEL 105
C1S4A
LH CIRCUIT BREAKER PANEL 105
C1S4
RH CIRCUIT BREAKER PANEL 106
C1S4T
LH CIRCUIT BREAKER PANEL 106
C1S4R
RH CIRCUIT BREAKER PANEL 107
C1S4Q
LH CIRCUIT BREAKER PANEL 107
C1S4P
RH CIRCUIT BREAKER PANEL 108
C1S4N
LH CIRCUIT BREAKER PANEL 108
C1S4M
RH CIRCUIT BREAKER PANEL 109
C1S4L
LH CIRCUIT BREAKER PANEL 109
C1S4K
RH CIRCUIT BREAKER PANEL 110
C1S4J
LH CIRCUIT BREAKER PANEL 110
C1S4H
RH CIRCUIT BREAKER PANEL 111
C1S4G
LH CIRCUIT BREAKER PANEL 111
C1S4F
RH CIRCUIT BREAKER PANEL 112
C1S4E
LH CIRCUIT BREAKER PANEL 112
C1S4D
RH CIRCUIT BREAKER PANEL 113
C1S4C
LH CIRCUIT BREAKER PANEL 113
C1S4B
RH CIRCUIT BREAKER PANEL 114
C1S4A
LH CIRCUIT BREAKER PANEL 114
C1S4
RH CIRCUIT BREAKER PANEL 115
C1S4T
LH CIRCUIT BREAKER PANEL 115
C1S4R
RH CIRCUIT BREAKER PANEL 116
C1S4Q
LH CIRCUIT BREAKER PANEL 116
C1S4P
RH CIRCUIT BREAKER PANEL 117
C1S4N
LH CIRCUIT BREAKER PANEL 117
C1S4M
RH CIRCUIT BREAKER PANEL 118
C1S4L
LH CIRCUIT BREAKER PANEL 118
C1S4K
RH CIRCUIT BREAKER PANEL 119
C1S4J
LH CIRCUIT BREAKER PANEL 119
C1S4H
RH CIRCUIT BREAKER PANEL 120
C1S4G
LH CIRCUIT BREAKER PANEL 120
C1S4F
RH CIRCUIT BREAKER PANEL 121
C1S4E
LH CIRCUIT BREAKER PANEL 121
C1S4D
RH CIRCUIT BREAKER PANEL 122
C1S4C
LH CIRCUIT BREAKER PANEL 122
C1S4B
RH CIRCUIT BREAKER PANEL 123
C1S4A
LH CIRCUIT BREAKER PANEL 123
C1S4
RH CIRCUIT BREAKER PANEL 124
C1S4T
LH CIRCUIT BREAKER PANEL 124
C1S4R
RH CIRCUIT BREAKER PANEL 125
C1S4Q
LH CIRCUIT BREAKER PANEL 125
C1S4P
RH CIRCUIT BREAKER PANEL 126
C1S4N
LH CIRCUIT BREAKER PANEL 126
C1S4M
RH CIRCUIT BREAKER PANEL 127
C1S4L
LH CIRCUIT BREAKER PANEL 127
C1S4K
RH CIRCUIT BREAKER PANEL 128
C1S4J
LH CIRCUIT BREAKER PANEL 128
C1S4H
RH CIRCUIT BREAKER PANEL 129
C1S4G
LH CIRCUIT BREAKER PANEL 129
C1S4F
RH CIRCUIT BREAKER PANEL 130
C1S4E
LH CIRCUIT BREAKER PANEL 130
C1S4D
RH CIRCUIT BREAKER PANEL 131
C1S4C
LH CIRCUIT BREAKER PANEL 131
C1S4B
RH CIRCUIT BREAKER PANEL 132
C1S4A
LH CIRCUIT BREAKER PANEL 132
C1S4
RH CIRCUIT BREAKER PANEL 133
C1S4T
LH CIRCUIT BREAKER PANEL 133
C1S4R
RH CIRCUIT BREAKER PANEL 134
C1S4Q
LH CIRCUIT BREAKER PANEL 134
C1S4P
RH CIRCUIT BREAKER PANEL 135
C1S4N
LH CIRCUIT BREAKER PANEL 135
C1S4M
RH CIRCUIT BREAKER PANEL 136
C1S4L
LH CIRCUIT BREAKER PANEL 136
C1S4K
RH CIRCUIT BREAKER PANEL 137
C1S4J
LH CIRCUIT BREAKER PANEL 137
C1S4H
RH CIRCUIT BREAKER PANEL 138
C1S4G
LH CIRCUIT BREAKER PANEL 138
C1S4F
RH CIRCUIT BREAKER PANEL 139
C1S4E
LH CIRCUIT BREAKER PANEL 139
C1S4D
RH CIRCUIT BREAKER PANEL 140
C1S4C
LH CIRCUIT BREAKER PANEL 140
C1S4B
RH CIRCUIT BREAKER PANEL 141
C1S4A
LH CIRCUIT BREAKER PANEL 141
C1S4
RH CIRCUIT BREAKER PANEL 142
C1S4T
LH CIRCUIT BREAKER PANEL 142
C1S4R
RH CIRCUIT BREAKER PANEL 143
C1S4Q
LH CIRCUIT BREAKER PANEL 143
C1S4P
RH CIRCUIT BREAKER PANEL 144
C1S4N
LH CIRCUIT BREAKER PANEL 144
C1S4M
RH CIRCUIT BREAKER PANEL 145
C1S4L
LH CIRCUIT BREAKER PANEL 145
C1S4K
RH CIRCUIT BREAKER PANEL 146
C1S4J
LH CIRCUIT BREAKER PANEL 146
C1S4H
RH CIRCUIT BREAKER PANEL 147
C1S4G
LH CIRCUIT BREAKER PANEL 147
C1S4F
RH CIRCUIT BREAKER PANEL 148
C1S4E
LH CIRCUIT BREAKER PANEL 148
C1S4D
RH CIRCUIT BREAKER PANEL 149
C1S4C
LH CIRCUIT BREAKER PANEL 149
C1S4B
RH CIRCUIT BREAKER PANEL 150
C1S4A
LH CIRCUIT BREAKER PANEL 150
C1S4
RH CIRCUIT BREAKER PANEL 151
C1S4T
LH CIRCUIT BREAKER PANEL 151
C1S4R
RH CIRCUIT BREAKER PANEL 152
C1S4Q
LH CIRCUIT BREAKER PANEL 152
C1S4P
RH CIRCUIT BREAKER PANEL 153
C1S4N
LH CIRCUIT BREAKER PANEL 153
C1S4M
RH CIRCUIT BREAKER PANEL 154
C1S4L
LH CIRCUIT BREAKER PANEL 154
C1S4K
RH CIRCUIT BREAKER PANEL 155
C1S4J
LH CIRCUIT BREAKER PANEL 155
C1S4H
RH CIRCUIT BREAKER PANEL 156
C1S4G
LH CIRCUIT BREAKER PANEL 156
C1S4F
RH CIRCUIT BREAKER PANEL 157
C1S4E
LH CIRCUIT BREAKER PANEL 157
C1S4D
RH CIRCUIT BREAKER PANEL 158
C1S4C
LH CIRCUIT BREAKER PANEL 158
C1S4B
RH CIRCUIT BREAKER PANEL 159
C1S4A
LH CIRCUIT BREAKER PANEL 159
C1S4
RH CIRCUIT BREAKER PANEL 160
C1S4T
LH CIRCUIT BREAKER PANEL 160
C1S4R
RH CIRCUIT BREAKER PANEL 161
C1S4Q
LH CIRCUIT BREAKER PANEL 161
C1S4P
RH CIRCUIT BREAKER PANEL 162
C1S4N
LH CIRCUIT BREAKER PANEL 162
C1S4M
RH CIRCUIT BREAKER PANEL 163
C1S4L
LH CIRCUIT BREAKER PANEL 163
C1S4K
RH CIRCUIT BREAKER PANEL 164
C1S4J
LH CIRCUIT BREAKER PANEL 164
C1S4H
RH CIRCUIT BREAKER PANEL 165
C1S4G
LH CIRCUIT BREAKER PANEL 165
C1S4F
RH CIRCUIT BREAKER PANEL 166
C1S4E
LH CIRCUIT BREAKER PANEL 166
C1S4D
RH CIRCUIT BREAKER PANEL 167
C1S4C
LH CIRCUIT BREAKER PANEL 167
C1S4B
RH CIRCUIT BREAKER PANEL 168
C1S4A
LH CIRCUIT BREAKER PANEL 168
C1S4
RH CIRCUIT BREAKER PANEL 169
C1S4T
LH CIRCUIT BREAKER PANEL 169
C1S4R
RH CIRCUIT BREAKER PANEL 170
C1S4Q
LH CIRCUIT BREAKER PANEL 170
C1S4P
RH CIRCUIT BREAKER PANEL 171
C1S4N
LH CIRCUIT BREAKER PANEL 171
C1S4M
RH CIRCUIT BREAKER PANEL 172
C1S4L
LH CIRCUIT BREAKER PANEL 172
C1S4K
RH CIRCUIT BREAKER PANEL 173
C1S4J
LH CIRCUIT BREAKER PANEL 173
C1S4H
RH CIRCUIT BREAKER PANEL 174
C1S4G
LH CIRCUIT BREAKER PANEL 174
C1S4F
RH CIRCUIT BREAKER PANEL 175
C1S4E
LH CIRCUIT BREAKER PANEL 175
C1S4D
RH CIRCUIT BREAKER PANEL 176
C1S4C
LH CIRCUIT BREAKER PANEL 176
C1S4B
RH CIRCUIT BREAKER PANEL 177
C1S4A
LH CIRCUIT BREAKER PANEL 177
C1S4
RH CIRCUIT BREAKER PANEL 178
C1S4T
LH CIRCUIT BREAKER PANEL 178
C1S4R
RH CIRCUIT BREAKER PANEL 179
C1S4Q
LH CIRCUIT BREAKER PANEL 179
C1S4P
RH CIRCUIT BREAKER PANEL 180
C1S4N
LH CIRCUIT BREAKER PANEL 180
C1S4M
RH CIRCUIT BREAKER PANEL 181
C1S4L
LH CIRCUIT BREAKER PANEL 181
C1S4K
RH CIRCUIT BREAKER PANEL 182
C1S4J
LH CIRCUIT BREAKER PANEL 182
C1S4H
RH CIRCUIT BREAKER PANEL 183
C1S4G
LH CIRCUIT BREAKER PANEL 183
C1S4F
RH CIRCUIT BREAKER PANEL 184
C1S4E
LH CIRCUIT BREAKER PANEL 184
C1S4D
RH CIRCUIT BREAKER PANEL 185
C1S4C
LH CIRCUIT BREAKER PANEL 185
C1S4B
RH CIRCUIT BREAKER PANEL 186
C1S4A
LH CIRCUIT BREAKER PANEL 186
C1S4
RH CIRCUIT BREAKER PANEL 187
C1S4T
LH CIRCUIT BREAKER PANEL 187
C1S4R
RH CIRCUIT BREAKER PANEL 188
C1S4Q
LH CIRCUIT BREAKER PANEL 188
C1S4P
RH CIRCUIT BREAKER PANEL 189
C1S4N
LH CIRCUIT BREAKER PANEL 189
C1S4M
RH CIRCUIT BREAKER PANEL 190
C1S4L
LH CIRCUIT BREAKER PANEL 190
C1S4K
RH CIRCUIT BREAKER PANEL 191
C1S4J
LH CIRCUIT BREAKER PANEL 191
C1S4H
RH CIRCUIT BREAKER PANEL 192
C1S4G
LH CIRCUIT BREAKER PANEL 192
C1S4F
RH CIRCUIT BREAKER PANEL 193
C1S4E
LH CIRCUIT BREAKER PANEL 193
C1S4D
RH CIRCUIT BREAKER PANEL 194
C1S4C
LH CIRCUIT BREAKER PANEL 194
C1S4B
RH CIRCUIT BREAKER PANEL 195
C1S4A
LH CIRCUIT BREAKER PANEL 195
C1S4
RH CIRCUIT BREAKER PANEL 196
C1S4T
LH CIRCUIT BREAKER PANEL 196
C1S4R
RH CIRCUIT BREAKER PANEL 197
C1S4Q
LH CIRCUIT BREAKER PANEL 197
C1S4P
RH CIRCUIT BREAKER PANEL 198
C1S4N
LH CIRCUIT BREAKER PANEL 198
C1S4M
RH CIRCUIT BREAKER PANEL 199
C1S4L
LH CIRCUIT BREAKER PANEL 199
C1S4K
RH CIRCUIT BREAKER PANEL 200
C1S4J
LH CIRCUIT BREAKER PANEL 200
C1S4H
RH CIRCUIT BREAKER PANEL 201
C1S4G
LH CIRCUIT BREAKER PANEL 201
C1S4F
RH CIRCUIT BREAKER PANEL 202
C1S4E
LH CIRCUIT BREAKER PANEL 202
C1S4D
RH CIRCUIT BREAKER PANEL 203
C1S4C
LH CIRCUIT BREAKER PANEL 203
C1S4B
RH CIRCUIT BREAKER PANEL 204
C1S4A
LH CIRCUIT BREAKER PANEL 204
C1S4
RH CIRCUIT BREAKER PANEL 205
C1S4T
LH CIRCUIT BREAKER PANEL 205
C1S4R
RH CIRCUIT BREAKER PANEL 206
C1S4Q
LH CIRCUIT BREAKER PANEL 206
C1S4P
RH CIRCUIT BREAKER PANEL 207
C1S4N
LH CIRCUIT BREAKER PANEL 207
C1S4M
RH CIRCUIT BREAKER PANEL 208
C1S4L
LH CIRCUIT BREAKER PANEL 208
C1S4K
RH CIRCUIT BREAKER PANEL 209
C1S4J
LH CIRCUIT BREAKER PANEL 209
C1S4H
RH CIRCUIT BREAKER PANEL 210
C1S4G
LH CIRCUIT BREAKER PANEL 210
C1S4F
RH CIRCUIT BREAKER PANEL 211
C1S4E
LH CIRCUIT BREAKER PANEL 211
C1S4D
RH CIRCUIT BREAKER PANEL 212
C1S4C
LH CIRCUIT BREAKER PANEL 212
C1S4B
RH CIRCUIT BREAKER PANEL 213
C1S4A
LH CIRCUIT BREAKER PANEL 213
C1S4
RH CIRCUIT BREAKER PANEL 214
C1S4T
LH CIRCUIT BREAKER PANEL 214
C1S4R
RH CIRCUIT BREAKER PANEL 215
C1S4Q
LH CIRCUIT BREAKER PANEL 215
C1S4P
RH CIRCUIT BREAKER PANEL 216
C1S4N
LH CIRCUIT BREAKER PANEL 216
C1S4M
RH CIRCUIT BREAKER PANEL 217
C1S4L
LH CIRCUIT BREAKER PANEL 217
C1S4K
RH CIRCUIT BREAKER PANEL 218
C1S4J
LH CIRCUIT BREAKER PANEL 218
C1S4H
RH CIRCUIT BREAKER PANEL 219
C1S4G
LH CIRCUIT BREAKER PANEL 219
C1S4F
RH CIRCUIT BREAKER PANEL 220
C1S4E
LH CIRCUIT BREAKER PANEL 220
C1S4D
RH CIRCUIT BREAKER PANEL 221
C1S4C
LH CIRCUIT BREAKER PANEL 221
C1S4B
RH CIRCUIT BREAKER PANEL 222
C1S4A
LH CIRCUIT BREAKER PANEL 222
C1S4
RH CIRCUIT BREAKER PANEL 223
C1S4T
LH CIRCUIT BREAKER PANEL 223
C1S4R
RH CIRCUIT BREAKER PANEL 224
C1S4Q
LH CIRCUIT BREAKER PANEL 224
C1S4P
RH CIRCUIT BREAKER PANEL 225
C1S4N
LH CIRCUIT BREAKER PANEL 225
C1S4M
RH CIRCUIT BREAKER PANEL 226
C1S4L
LH CIRCUIT BREAKER PANEL 226
C1S4K
RH CIRCUIT BREAKER PANEL 227
C1S4J
LH CIRCUIT BREAKER PANEL 227
C1S4H
RH CIRCUIT BREAKER PANEL 228
C1S4G
LH CIRCUIT BREAKER PANEL 228
C1S4F
RH CIRCUIT BREAKER PANEL 229
C1S4E
LH CIRCUIT BREAKER PANEL 229
C1S4D
RH CIRCUIT BREAKER PANEL 230
C1S4C
LH CIRCUIT BREAKER PANEL 230
C1S4B
RH CIRCUIT BREAKER PANEL 231
C1S4A
LH CIRCUIT BREAKER PANEL 231
C1S4
RH CIRCUIT BREAKER PANEL 232
C1S4T
LH CIRCUIT BREAKER PANEL 232
C1S4R
RH CIRCUIT BREAKER PANEL 233
C1S4Q
LH CIRCUIT BREAKER PANEL 233
C1S4P
RH CIRCUIT BREAKER PANEL 234
C1S4N
LH CIRCUIT BREAKER PANEL 234
C1S4M
RH CIRCUIT BREAKER PANEL 235
C1S4L
LH CIRCUIT BREAKER PANEL 235
C1S4K
RH CIRCUIT BREAKER PANEL 236
C1S4J
LH CIRCUIT BREAKER PANEL 236
C1S4H
RH CIRCUIT BREAKER PANEL 237
C1S4G
LH CIRCUIT BREAKER PANEL 237
C1S4F
RH CIRCUIT BREAKER PANEL 238
C1S4E
LH CIRCUIT BREAKER PANEL 238
C1S4D
RH CIRCUIT BREAKER PANEL 239
C1S4C
LH CIRCUIT BREAKER PANEL 239
C1S4B
RH CIRCUIT BREAKER PANEL 240
C1S4A
LH CIRCUIT BREAKER PANEL 240
C1S4
RH CIRCUIT BREAKER PANEL 241
C1S4T
LH CIRCUIT BREAKER PANEL 241
C1S4R
RH CIRCUIT BREAKER PANEL 242
C1S4Q
LH CIRCUIT BREAKER PANEL 242
C1S4P
RH CIRCUIT BREAKER PANEL 243
C1S4N
LH CIRCUIT BREAKER PANEL 243
C1S4M
RH CIRCUIT BREAKER PANEL 244
C1S4L
LH CIRCUIT BREAKER PANEL 244
C1S4K
RH CIRCUIT BREAKER PANEL 245
C1S4J
LH CIRCUIT BREAKER PANEL 245
C1S4H
RH CIRCUIT BREAKER PANEL 246
C1S4G
LH CIRCUIT BREAKER PANEL 246
C1S4F
RH CIRCUIT BREAKER PANEL 247
C1S4E
LH CIRCUIT BREAKER PANEL 247
C1S4D
RH CIRCUIT BREAKER PANEL 248
C1S4C
LH CIRCUIT BREAKER PANEL 248
C1S4B
RH CIRCUIT BREAKER PANEL 249
C1S4A
LH CIRCUIT BREAKER PANEL 249
C1S4
RH CIRCUIT BREAKER PANEL 250
C1S4T
LH CIRCUIT BREAKER PANEL 250
C1S4R
RH CIRCUIT BREAKER PANEL 251
C1S4Q
LH CIRCUIT BREAKER PANEL 251
C1S4P
RH CIRCUIT BREAKER PANEL 252
C1S4N
LH CIRCUIT BREAKER PANEL 252
C1S4M
RH CIRCUIT BREAKER PANEL 253
C1S4L
LH CIRCUIT BREAKER PANEL 253
C1S4K
RH CIRCUIT BREAKER PANEL 254
C1S4J
LH CIRCUIT BREAKER PANEL 254
C1S4H
RH CIRCUIT BREAKER PANEL 255
C1S4G
LH CIRCUIT BREAKER PANEL 255
C1S4F
RH CIRCUIT BREAKER PANEL 256
C1S4E
LH CIRCUIT BREAKER PANEL 256
C1S4D
RH CIRCUIT BREAKER PANEL 257
C1S4C
LH CIRCUIT BREAKER PANEL 257
C1S4B
RH CIRCUIT BREAKER PANEL 258
C1S4A
LH CIRCUIT BREAKER PANEL 258
C1S4
RH CIRCUIT BREAKER PANEL 259
C1S4T
LH CIRCUIT BREAKER PANEL 259
C1S4R
RH CIRCUIT BREAKER PANEL 260
C1S4Q
LH CIRCUIT BREAKER PANEL 260
C1S4P
RH CIRCUIT BREAKER PANEL 261
C1S4N
LH CIRCUIT BREAKER PANEL 261
C1S4M
RH CIRCUIT BREAKER PANEL 262
C1S4L
LH CIRCUIT BREAKER PANEL 262
C1S4K
RH CIRCUIT BREAKER PANEL 263
C1S4J
LH CIRCUIT BREAKER PANEL 263
C1S4H
RH CIRCUIT BREAKER PANEL 264
C1S4G
LH CIRCUIT BREAKER PANEL 264
C1S4F
RH CIRCUIT BREAKER PANEL 265
C1S4E
LH CIRCUIT BREAKER PANEL 265
C1S4D
RH CIRCUIT BREAKER PANEL 266
C1S4C
LH CIRCUIT BREAKER PANEL 266
C1S4B
RH CIRCUIT BREAKER PANEL 267
C1S4A
LH CIRCUIT BREAKER PANEL 267
C1S4
RH CIRCUIT BREAKER PANEL 268
C1S4T
LH CIRCUIT BREAKER PANEL 268
C1S4R
RH CIRCUIT BREAKER PANEL 269
C1S4Q
LH CIRCUIT BREAKER PANEL 269
C1S4P
RH CIRCUIT BREAKER PANEL 270
C1S4N
LH CIRCUIT BREAKER PANEL 270
C1S4M
RH CIRCUIT BREAKER PANEL 271
C1S4L
LH CIRCUIT BREAKER PANEL 271
C1S4K
RH CIRCUIT BREAKER PANEL 272
C1S4J
LH CIRCUIT BREAKER PANEL 272
C1S4H
RH CIRCUIT BREAKER PANEL 273
C1S4G
LH CIRCUIT BREAKER PANEL 273
C1S4F
RH CIRCUIT BREAKER PANEL 274
C1S4E
LH CIRCUIT BREAKER PANEL 274
C1S4D
RH CIRCUIT BREAKER PANEL 275
C1S4C
LH CIRCUIT BREAKER PANEL 275
C1S4B
RH CIRCUIT BREAKER PANEL 276
C1S4A
LH CIRCUIT BREAKER PANEL 276
C1S4
RH CIRCUIT BREAKER PANEL 277
C1S4T
LH CIRCUIT BREAKER PANEL 277
C1S4R
RH CIRCUIT BREAKER PANEL 278
C1S4Q
LH CIRCUIT BREAKER PANEL 278
C1S4P
RH CIRCUIT BREAKER PANEL 279
C1S4N
LH CIRCUIT BREAKER PANEL 279
C1S4M
RH CIRCUIT BREAKER PANEL 280
C1S4L
LH CIRCUIT BREAKER PANEL 280
C1S4K
RH CIRCUIT BREAKER PANEL 281
C1S4J
LH CIRCUIT BREAKER PANEL 281
C1S4H
RH CIRCUIT BREAKER PANEL 282
C1S4G
LH CIRCUIT BREAKER PANEL 282
C1S4F
RH CIRCUIT BREAKER PANEL 283
C1S4E
LH CIRCUIT BREAKER PANEL 283
C1S4D
RH CIRCUIT BREAKER PANEL 284
C1S4C
LH CIRCUIT BREAKER PANEL 284
C1S4B
RH CIRCUIT BREAKER PANEL 285
C1S4A
LH CIRCUIT BREAKER PANEL 285
C1S4
RH CIRCUIT BREAKER PANEL 286
C1S4T
LH CIRCUIT BREAKER PANEL 286
C1S4R
RH CIRCUIT BREAKER PANEL 287
C1S4Q
LH CIRCUIT BREAKER PANEL 287
C1S4P
RH CIRCUIT BREAKER PANEL 288
C1S4N
LH CIRCUIT BREAKER PANEL 288
C1S4M
RH CIRCUIT BREAKER PANEL 289
C1S4L
LH CIRCUIT BREAKER PANEL 289
C1S4K
RH CIRCUIT BREAKER PANEL 290
C1S4J
LH CIRCUIT BREAKER PANEL 290
C1S4H
RH CIRCUIT BREAKER PANEL 291
C1S4G
LH CIRCUIT BREAKER PANEL 291
C1S4F
RH CIRCUIT BREAKER PANEL 292
C1S4E
LH CIRCUIT BREAKER PANEL 292

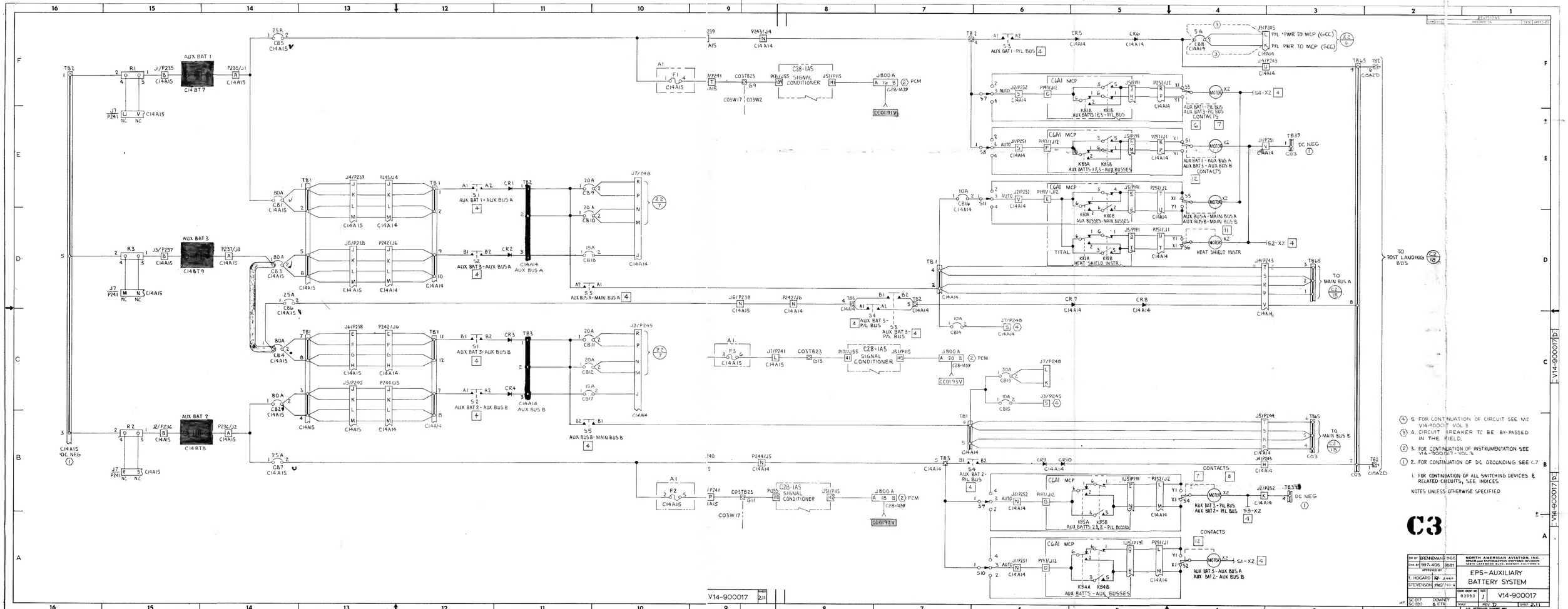

4. S. FOR CONTINUATION OF CIRCUIT SEE MZ V14-900017 VOL 3.
3. 4. CIRCUIT BREAKER TO BE BY-PASSED IN THE FIELD.
2. 3. FOR CONTINUATION OF INSTRUMENTATION SEE V14-900017 - VOL 3.
1. 2. FOR CONTINUATION OF DC GROUNDING SEE C.7
1. FOR CONTINUATION OF ALL SWITCHING DEVICES & RELATED CIRCUITS, SEE INDICES.

NOTES UNLESS OTHERWISE SPECIFIED

C3

DR BY BRENNEMAN 11-16-65		NORTH AMERICAN AVIATION, INC. SPACE & INFORMATION SYSTEMS DIVISION SEAL BEACH, CALIFORNIA	
CHK BY 097-406 10-8-71			
APPROVED BY		EPS-AUXILIARY BATTERY SYSTEM	
T. HOGARD			
STEVENSON			
SC 007 DONNEY & ETR	CODE IDENT NO. 03953	SIZE J	V14-900017
SC 020	SCALE	REV. D	SHEET 2.11

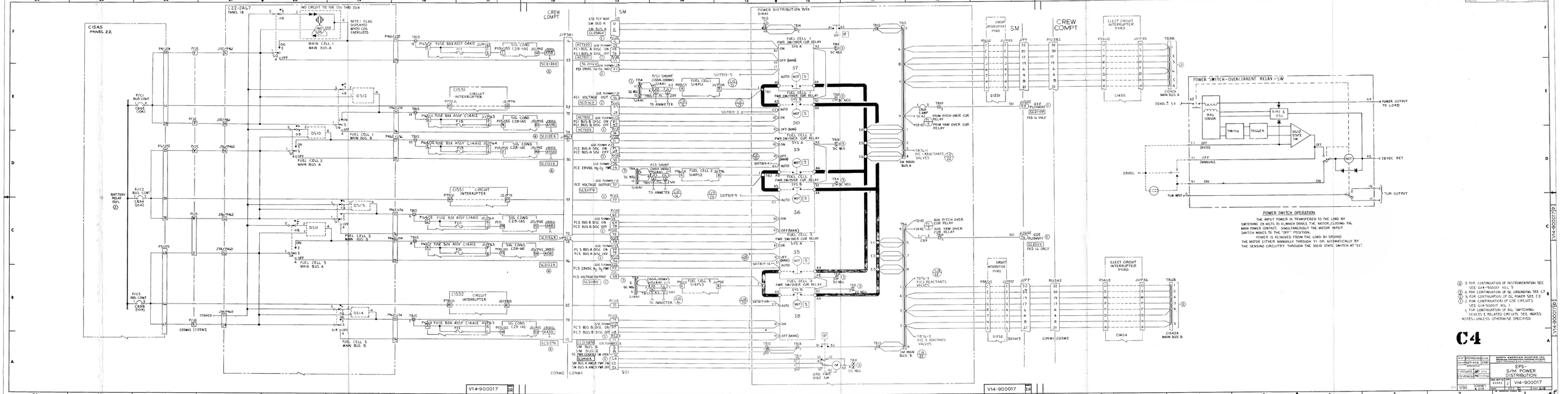
C1S4S
PANEL 22
C22-2A67
PANEL 18
IND CIRCUIT TIE FOR C02 THRU C04
NOTE: FLAG DISPLAYED WHEN CKT ENERGIZED
MAIN CELL 1
MAIN BUS A
FUEL CELL 1
MAIN BUS A
FUEL CELL 2
MAIN BUS A
FUEL CELL 2
MAIN BUS B
FUEL CELL 3
MAIN BUS A
FUEL CELL 3
MAIN BUS B
BATTERY RELAY BUS (28A)
CREW COMPT
SM
POWER DISTRIBUTION BOX
S14A1
FUEL CELL 1
PWR SW/OVER CUR RELAY
SYS A
FUEL CELL 2
PWR SW/OVER CUR RELAY
SYS A
FUEL CELL 2
PWR SW/OVER CUR RELAY
SYS B
FUEL CELL 3
PWR SW/OVER CUR RELAY
SYS A
FUEL CELL 3
PWR SW/OVER CUR RELAY
SYS B
SM MAIN BUS A
SM MAIN BUS B
GRD PWR DISC SW
CIRCUIT INTERRUPTER PYRO
ELECT CIRCUIT INTERRUPTER PYRO
CIS4A MAIN BUS A
CIS4A MAIN BUS B
POWER SWITCH-OVERCURRENT RELAY-SW
SENSOR
BIAS & OSC.
TIMING
TRIGGER
SOLID STATE SW
POWER OUTPUT TO LOAD
28VDC RET
TLM OUTPUT
TLM INPUT
POWER SWITCH OPERATION
THE INPUT POWER IS TRANSFERED TO THE LOAD BY SWITCHING 28 VOLTS TO X1, WHICH DRIVES THE MOTOR, CLOSING THE MAIN POWER CONTACT. SIMULTANEOUSLY THE MOTOR INPUT SWITCH MOVES TO THE "OFF" POSITION.
POWER IS REMOVED FROM THE LOAD BY DRIVING THE MOTOR EITHER MANUALLY THROUGH Y1 OR AUTOMATICALLY BY THE SENSING CIRCUITRY THROUGH THE SOLID STATE SWITCH AT C47
C4
EPS-
S/M POWER DISTRIBUTION
V14-900017
NORTH AMERICAN AVIATION, INC.
SPACE AND INFORMATION SYSTEMS DIVISION
SCALE NONE
SIZE E
V14-900017 P1

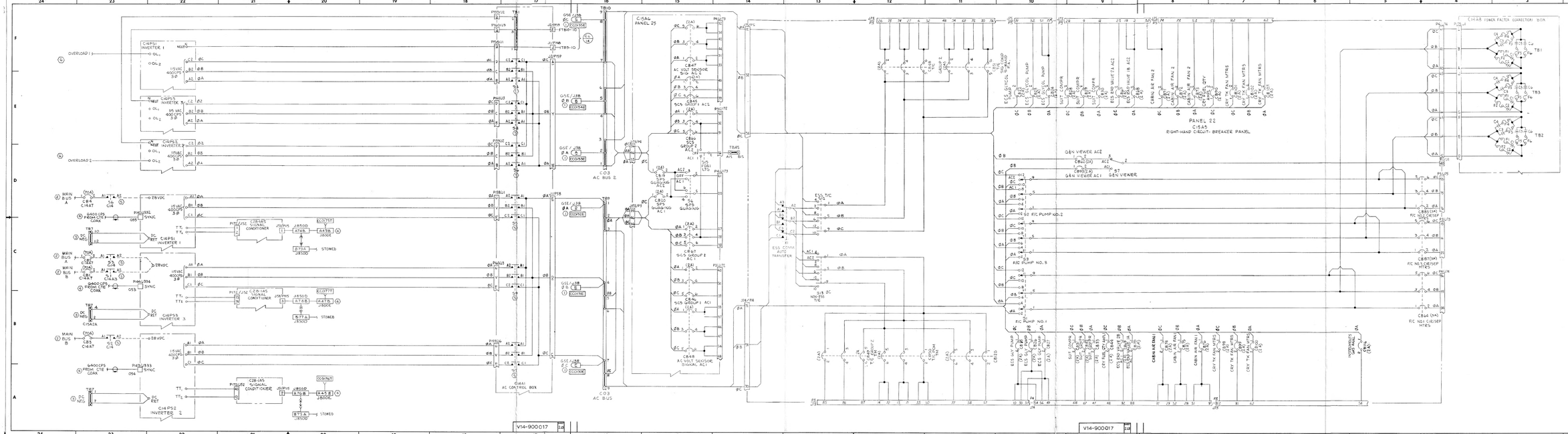

(8) 7. FOR CONTINUATION OF CIRCUITRY SEE C9
(7) 6. FOR CONTINUATION OF CIRCUITRY SEE C8
(5) 5. FOR CONTINUATION OF INSTRUMENTATION SEE V14-900017 VOL. 3
(3) 4. FOR CONTINUATION OF D.C. GROUNDS, SEE C.7
(2) 3. FOR CONTINUATION OF D.C. POWER, SEE C.2.
(1) 2. FOR CONTINUATION OF GSE CIRCUITS SEE G14-900017 VOL. 1
1. FOR CONTINUATION OF ALL SWITCHING DEVICES AND RELATED CIRCUITS, SEE INDEX

NOTES: UNLESS OTHERWISE SPECIFIED

C5

DR-P. BRICKENDONER-4-62		NORTH AMERICAN AVIATION, INC. SPACE & INFORMATION SYSTEMS DIVISION	
CH-R. FEY-4-26-62	SCALE		
APPROVED		EPS-AC POWER DISTRIBUTION	
C. BOGARD			
SIZE	CODE IDENT NO.	DWG NO.	REV
D	81349	V14-900017	
SCALE	SHEET		

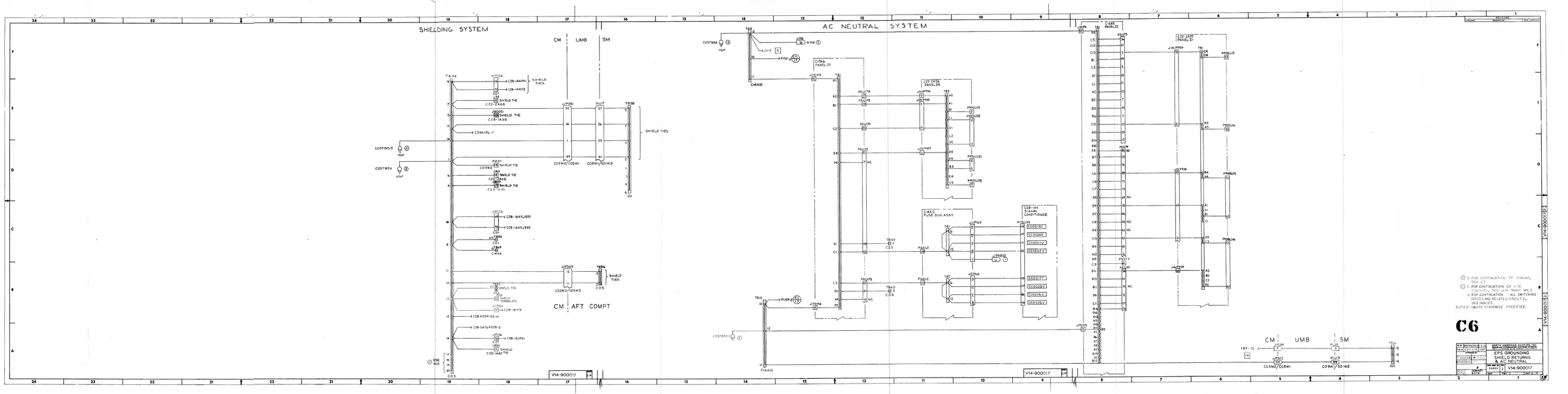

NOTE 2: FOR CONTINUATION OF CIRCUIT, SEE C7.

NOTE 3: FOR CONTINUATION OF FUSE CIRCUITS, SEE G14-900017 VOL.2.

NOTE 4: FOR CONTINUATION ALL SWITCHING DEVICES AND RELATED CIRCUITS, SEE NOTE 1.

NOTES: UNLESS OTHERWISE SPECIFIED

C6

DR M. BERTRANDAS	6-5-72	NORTH AMERICAN AVIATION, INC. SPACE & INFORMATION SYSTEMS DIVISION	
CK M. CLEVELAND	6-13-72		
ENGINEERING		EPS GROUNDING SHIELD RETURNS AC NEUTRAL	
T MOCHAN	7-19-72		
APPROVALS			
CODE IDENT NO. 81349	SIZE D	DWG NO. V14-900017	REV 7
SCALE NONE		SHEET 2 OF 6	

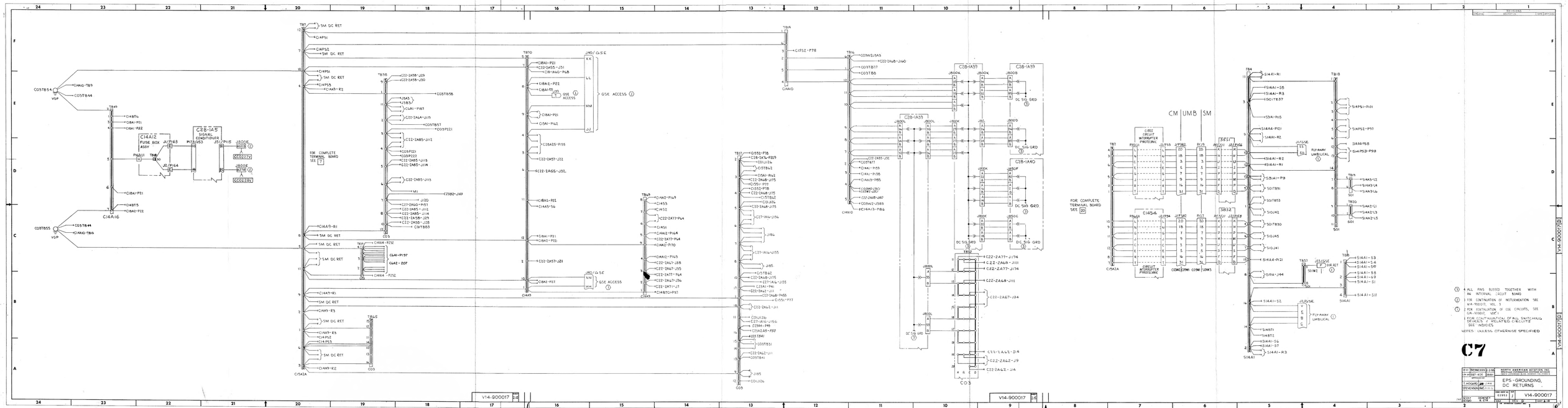
C28-1A5
SIGNAL CONDITIONER
C14A12
FUSE BOX ASSY
C14A16
C28-1A39
C28-1A40
C14A10
C14A9
C14A3A
C14A1
C03
C14A7
C14A5
C14A4
C14A2
C14A6
C14A8
C14A11
C15A3A
C15A1
C15A2
C14A13
C14A14
C14A15
C14A16
C14A17
C14A18
C14A19
C14A20
C14A21
C14A22
C14A23
C14A24
C14A25
C14A26
C14A27
C14A28
C14A29
C14A30
C14A31
C14A32
C14A33
C14A34
C14A35
C14A36
C14A37
C14A38
C14A39
C14A40
C14A41
C14A42
C14A43
C14A44
C14A45
C14A46
C14A47
C14A48
C14A49
C14A50
C14A51
C14A52

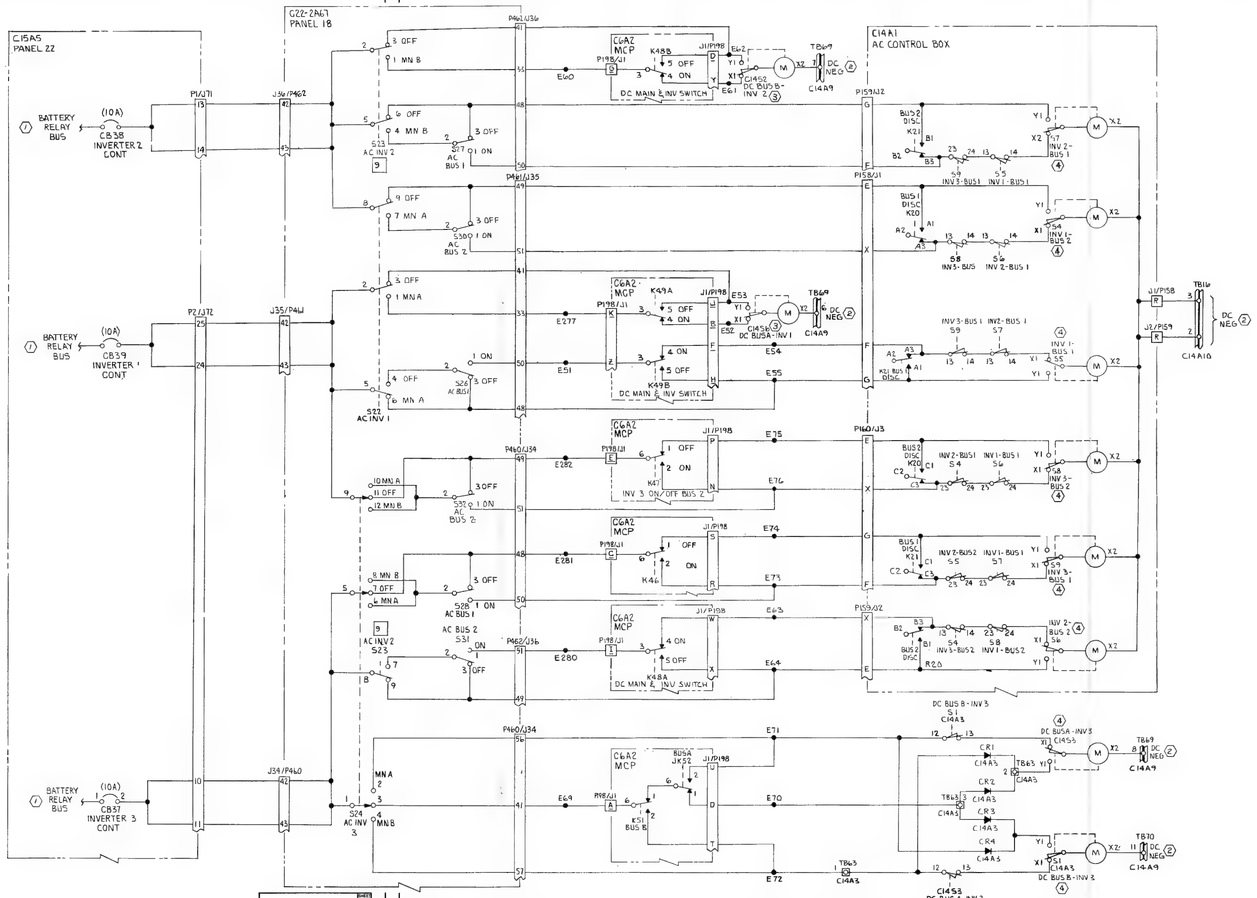

(4) 5. FOR CONTINUATION OF CIRCUIT, SEE C5
(3) 4. FOR CONTINUATION OF CIRCUIT, SEE C2
(2) 3. FOR CONTINUATION OF D C GROUNDING, SEE C7
(1) 2. FOR CONTINUATION OF D C POWER, SEE C2
1. FOR CONTINUAT ON OF ALL SWITCRING DEVICES AND RELATED CIRCUITS, SEE INDICES

NOTES: UNLESS OTHERWISE SPECIFIED

C8

DR BY BRENNEMAN 2766	NORTH AMERICAN AVIATION, INC. SPACE AND INFORMATION SYSTEMS DIVISION SEAL BEACH BLVD. ROCKETDYNE CALIFORNIA	
CHK BY 697-406 3881		
APPROVED BY	EPS-AC INVERTER CHANGE OVER	
T HOGARD 3094		
STEVENSON		
SC 017 DOWNEY SC 020 & ETR	CODE IDENT NO 03953 / J / V14-900017	
	SCALE / REV D / SHEET 216	

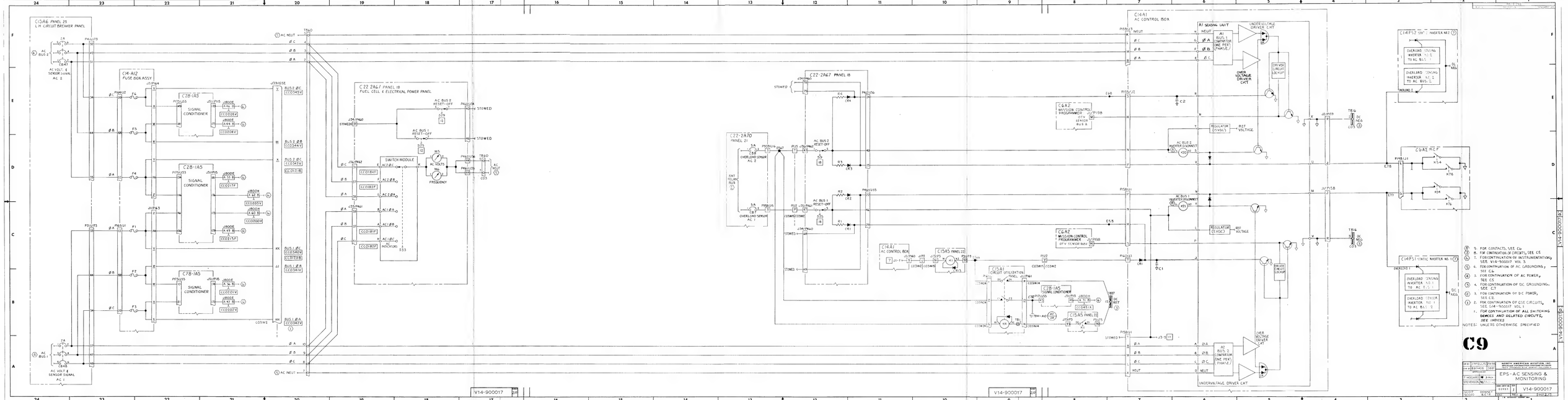

NOTES: UNLESS OTHERWISE SPECIFIED

1. FOR CONTINUATION OF ALL SWITCHING DEVICES AND RELATED CIRCUITS, SEE (INDICE)
2. FOR CONTINUATION OF CSE CIRCUITS, SEE (LM-900017 VOL 3)
3. FOR CONTINUATION OF D.C. POWER, SEE C8
4. FOR CONTINUATION OF D.C. GROUNDING, SEE C7
5. FOR CONTINUATION OF AC POWER, SEE C5
6. FOR CONTINUATION OF AC GROUNDING, SEE C6
7. FOR CONTINUATION OF INSTRUMENTATION, SEE V14-900017 VOL 3
8. FOR CONTINUATION OF CONTACTS, SEE C9

C9

DRWN	DEPELLIS	04/08/66	NORTH AMERICAN AVIATION, INC. SPACE and INFORMATION SYSTEMS DIVISION
CHK	BESTADE	3/8/67	CONTRACT NAS 9-150
APPROVED			EPS-AC SENSING & MONITORING
T-HOGARTH	3-8-67		
ENGINEERING			
SCALE	DOCUMENT NO.		SHEET 9 V14-900017
NONE	V14-900017		SHEET 9 OF 9

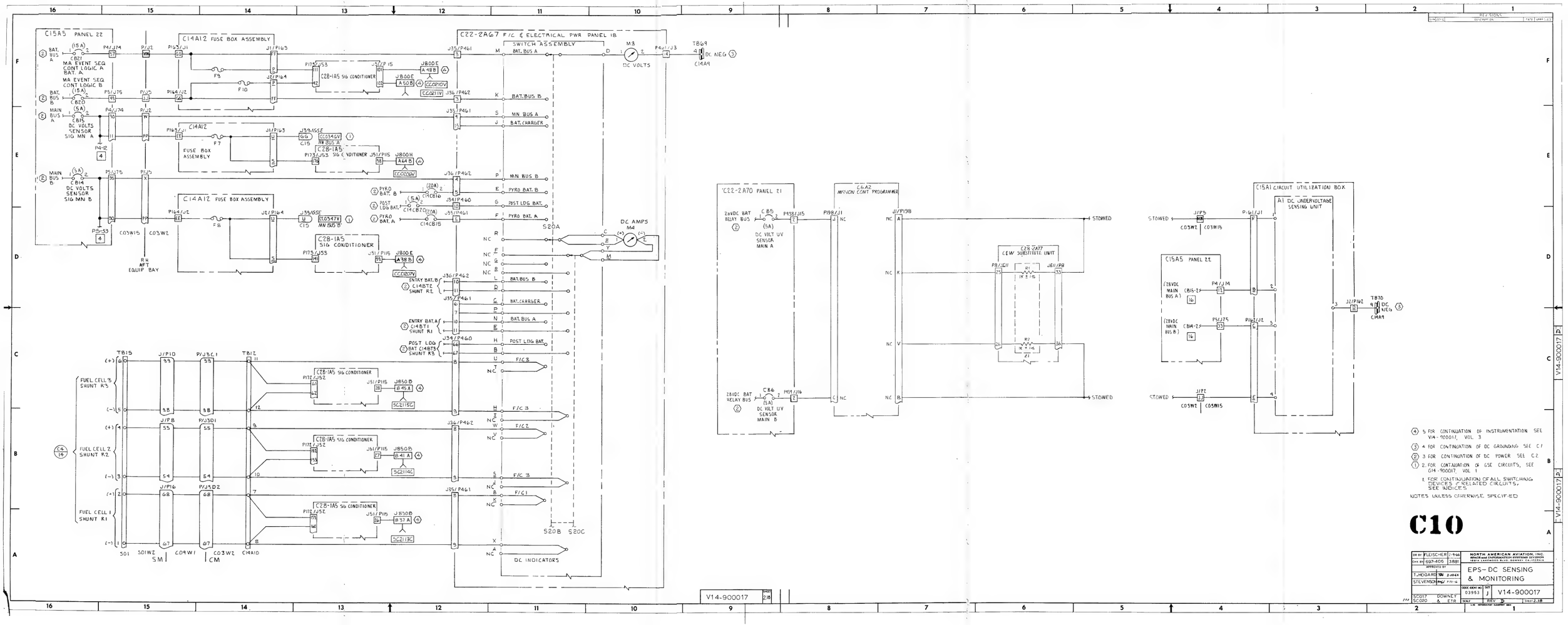
C15A5 PANEL 22
C14A12 FUSE BOX ASSEMBLY
C22-2A67 F/C & ELECTRICAL PWR PANEL 1B
SWITCH ASSEMBLY
M3 DC VOLTS
TB69 DC NEG
C14A9
BAT. BUS A
MA EVENT SEQ CONT LOGIC A BAT. A
MA EVENT SEQ CONT LOGIC B
BAT. BUS B
MAIN BUS A
DC VOLTS SENSOR SIG MN A
MAIN BUS B
DC VOLTS SENSOR SIG MN B
FUSE BOX ASSEMBLY
C28-1A5 SIG CONDITIONER
MN BUS A
MN BUS B
BAT. BUS B
MN BUS A
BAT. CHARGER
PYRO BAT. B
POST LDG BAT.
PYRO BAT. A
DC AMPS M4
S20A
S20B
S20C
ENTRY BAT. B
ENTRY BAT. A
POST LDG BAT.
F/C 3
F/C 2
F/C 1
DC INDICATORS
FUEL CELL 3 SHUNT R3
FUEL CELL 2 SHUNT R2
FUEL CELL 1 SHUNT R1
C22-2A70 PANEL 21
C6A2 MISSION CONT PROGRAMMER
C28-2A77 CEW SUBSTITUTE UNIT
STOWED
C15A1 CIRCUIT UTILIZATION BOX
A1 DC UNDERVOLTAGE SENSING UNIT
C15A5 PANEL 22
TB70 DC NEG
④ 5 FOR CONTINUATION OF INSTRUMENTATION SEE V14-900017, VOL 3
③ 4 FOR CONTINUATION OF DC GROUNDING SEE C1
② 3 FOR CONTINUATION OF DC POWER SEE C2
① 2 FOR CONTINUATION OF GSE CIRCUITS, SEE G14-900017, VOL 1
1 FOR CONTINUATION OF ALL SWITCHING DEVICES & RELATED CIRCUITS, SEE INDICES
NOTES UNLESS OTHERWISE SPECIFIED
C10
DR BY FLEISCHER
CHK BY 697-406
APPROVED BY T. HOGARD
STEVENSON
NORTH AMERICAN AVIATION, INC.
SPACE and INFORMATION SYSTEMS DIVISION
EPS- DC SENSING & MONITORING
V14-900017
SCO17 SCO20 DOWNEY & ETR
REV D
SHEET 2.1B

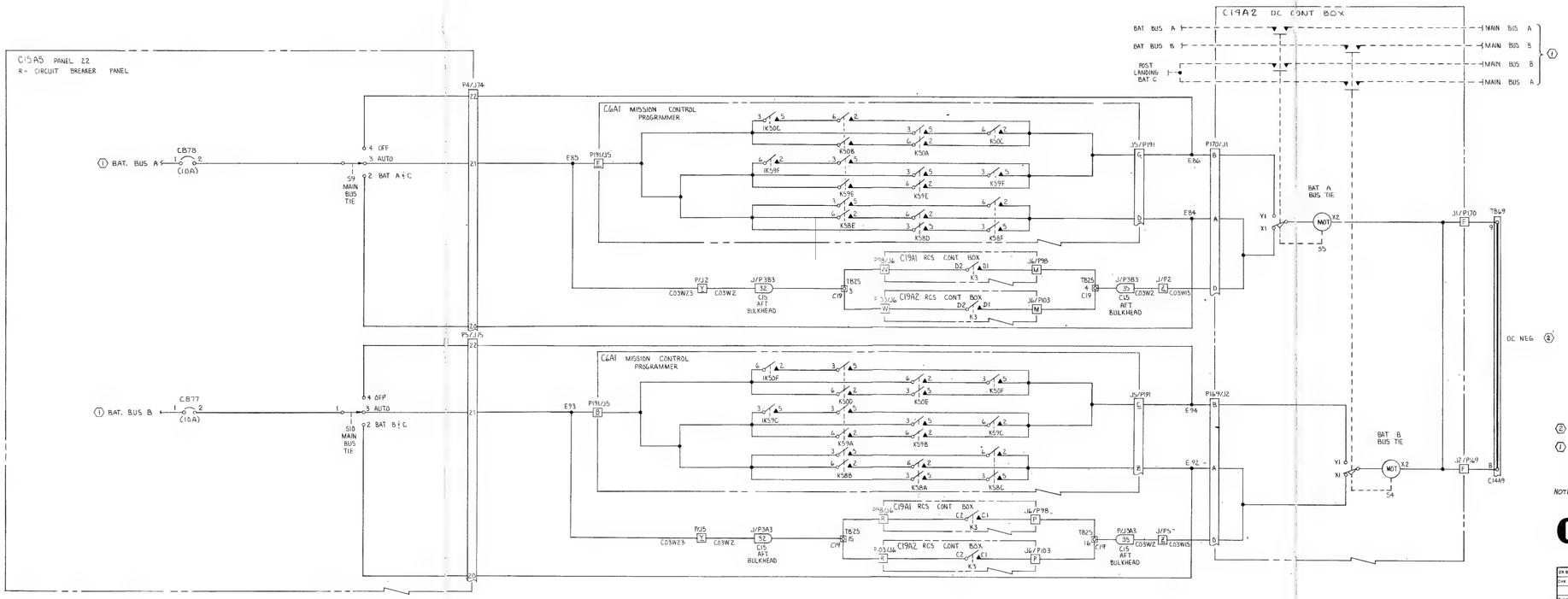

(2) 3. FOR CONTINUATION OF DC GROUNDING, SEE C7

(1) 2. FOR CONTINUATION OF DC POWER, SEE C2

1. FOR CONTINUATION OF ALL SWITCHING DEVICES AND RELATED CIRCUITS, SEE INDICIES

NOTES: UNLESS OTHERWISE SPECIFIED

C11

DR BY	R.A. LONG	27560	NORTH AMERICAN AVIATION, INC. SPACE AND INFORMATION SYSTEMS DIVISION 12214 LAKEWOOD BLVD., DOWNEY, CALIFORNIA
CHK BY	697-406	3881	
APPROVED BY			EPS-BUS TIE CONTROL
T. HOGARD		3-14-66	
STEVENSON		3-21-66	
SC 017 SC 020	DOWNEY & ETR		CODE IDENT NO 03953 · SIZE J · V14-900017
			REV D · SHEET 215

V14-900017 D

V14-900017 D

V14-900017 215

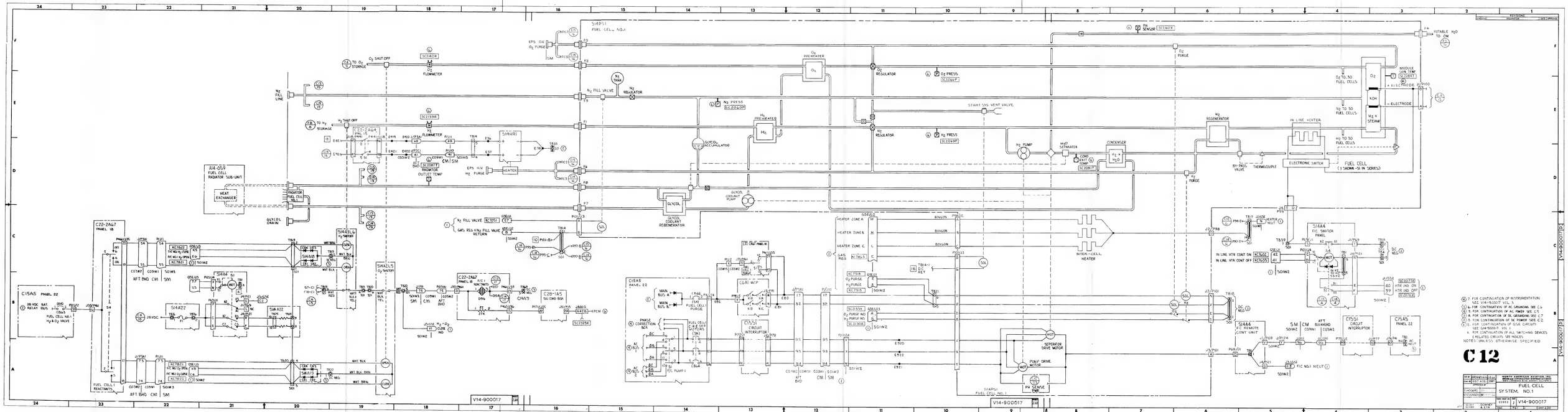

(2) 7. FOR CONTINUATION OF INSTRUMENTATION SEE V14-900017 VOL. 3.
(3) 6. FOR CONTINUATION OF AC GROUNDING SEE C.6
(4) 5. FOR CONTINUATION OF AC POWER SEE C.5
(5) 4. FOR CONTINUATION OF DC GROUNDING SEE C.7
(6) 3. FOR CONTINUATION OF DC POWER SEE C.2
(7) 2. FOR CONTINUATION OF GSE CIRCUITS SEE S14-900017 VOL. 1
1. FOR CONTINUATION OF ALL SWITCHING DEVICES & RELATED CIRCUITS SEE INDICES
NOTES: UNLESS OTHERWISE SPECIFIED

C 12

REVISIONS		
SYMBOL	REVISIONS DESCRIPTION	DATE APPROVED

DR BY	DATE	NORTH AMERICAN AVIATION, INC. SPACE DIVISION, ROCKWELL INTERNATIONAL CORPORATION, CANOGA PARK, CALIFORNIA
DRAWN BY		
CHECKED BY		FUEL CELL
STRESS		SYSTEM, NO. 1
DESIGN		
		CODE IDENT NO. 93955 — DOCUMENT NO. V14-900017
SCALE NONE	SHEET 6 OF 18	REV. — SHEET A2B

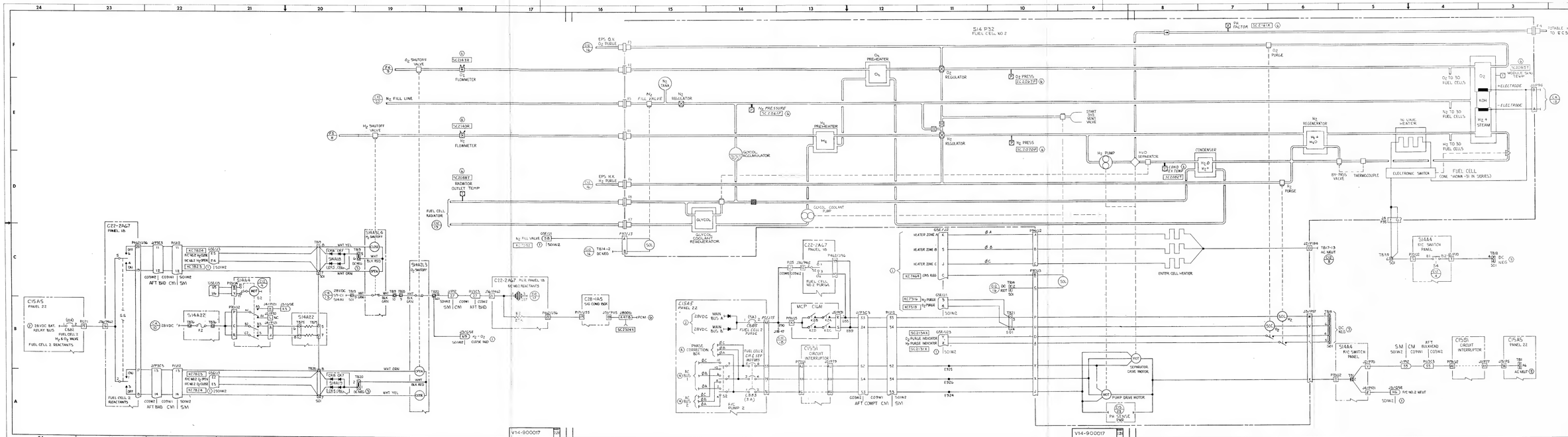

6 FOR CONTINUATION OF INSTRUMENTATION SEE V14-900017

6 FOR CONTINUATION OF AC GROUNDING SEE C4

5 FOR CONTINUATION OF AC POWER SEE C5

5 FOR CONTINUATION OF DC GROUNDING SEE C7

2 FOR CONTINUATION OF DC POWER SEE C2

1 FOR CONTINUATION OF GSE CIRCUITS, SEE S18-900017 VOL 1

1 FOR CONTINUATION OF ALL SWITCHING DEVICES & RELATED CIRCUITS, SEE INDICES.

NOTES UNLESS OTHERWISE SPECIFIED

C13

DR F. LEWIS 11/20/62	NORTH AMERICAN AVIATION, INC. SPACE and INFORMATION SYSTEMS DIVISION	
CH R ROSTAGNO 13891	CONTINENTAL AVENUE, DOWNEY, CALIFORNIA	
ENGINEER	FUEL CELL SYSTEM NO. 2	
F. HOGARTH AF 27126		
SUPERVISOR		

SIZE D | CODE IDENT NO 93553 | DWG NO V14-900017

SCALE NONE | SHEET 1 OF 1

P/F LIBRARY DOWNEY, CALIF. | D-180 | A-118

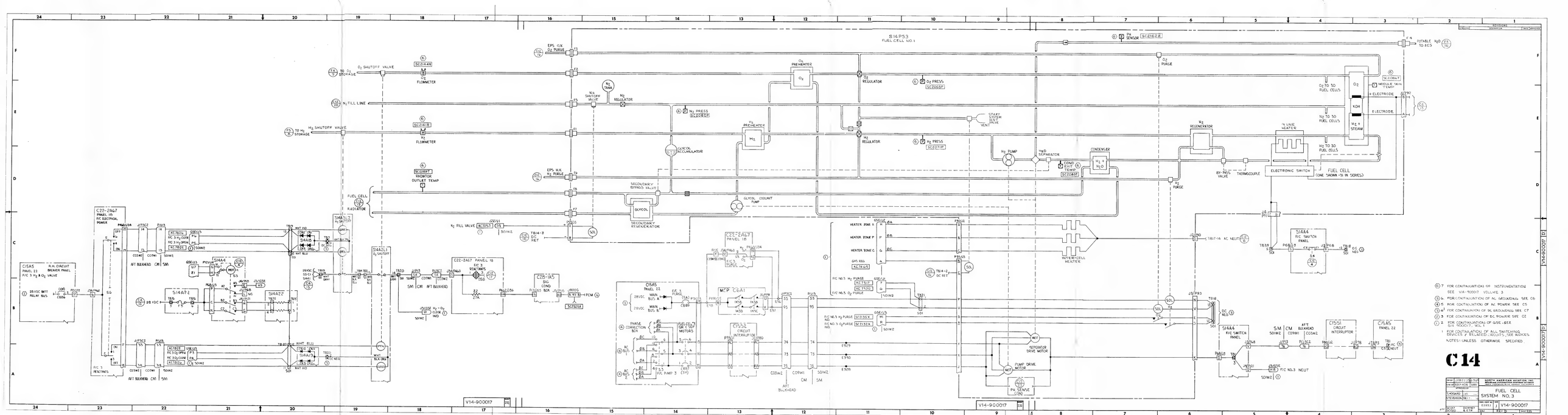

(6) 7 FOR CONTINUATIONS OF INSTRUMENTATION SEE V14-900017, VOLUME 3

(5) 6 FOR CONTINUATION OF AC GROUNDING SEE C6

(4) 5 FOR CONTINUATION OF AC POWER SEE C5

(3) 4 FOR CONTINUATION OF DC GROUNDING SEE C7

(2) 3 FOR CONTINUATION OF DC POWER SEE C2

(1) 2 FOR CONTINUATION OF GSE, &EE SEE 900017, VOL 1

1 FOR CONTINUATION OF ALL SWITCHING DEVICES & RELATED CIRCUITS, SEE INDICES

NOTES: UNLESS OTHERWISE SPECIFIED

C14

DR BY	JUN 11 '68		NORTH AMERICAN AVIATION, INC. SPACE DIVISION, ROCKWELL STANDARD DIVISION, WEST LOS ANGELES 25, CALIFORNIA
CHK ENGR	FEB 29 '68		
MANAGER			FUEL CELL SYSTEM NO. 3
STANDARD			
ENGINEERING			
SCALE	NONE	DATE	V14-900017
PROJECT	DOWNEY & ETR		

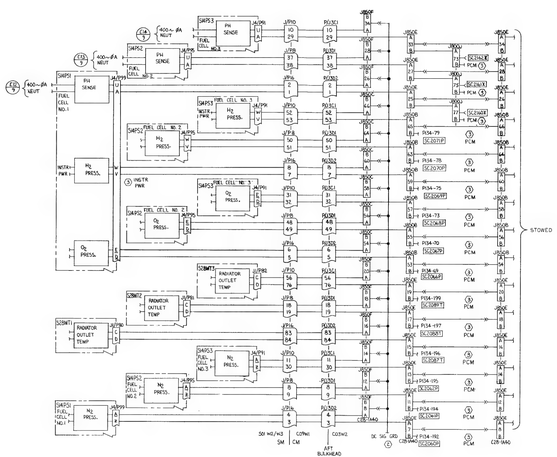

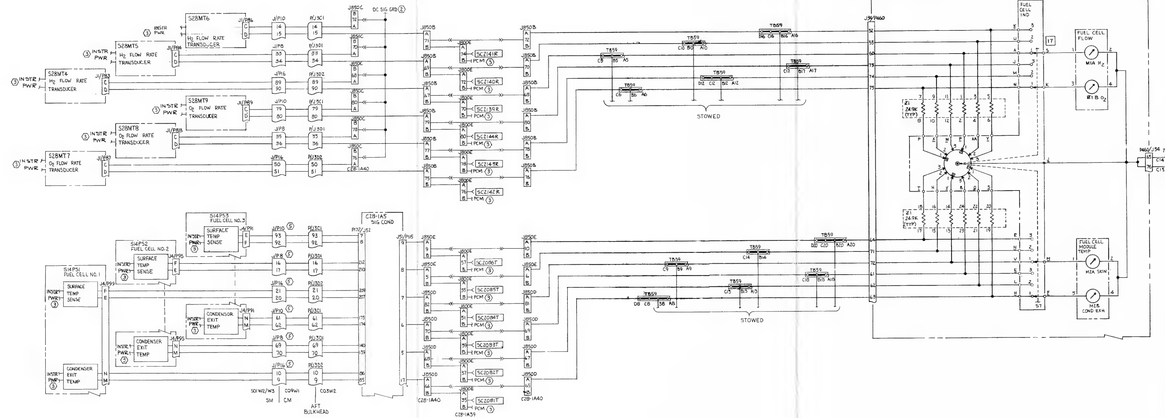

① = FOR CONTINUATION OF INSTRUMENTATION SEE V14-900017, VOL. 3

② = FOR CONTINUATION OF DC DISTRIBUTION SEE C7

③ = FOR CONTINUATION OF DC PIONEER, SEE C2

④ = FOR CONTINUATION OF ALL SWITCHING & RELATED CIRCUITS, SEE C5, C6

NOTES: UNLESS OTHERWISE SPECIFIED

C15

DRAWN BY FULLONG 3-30-67	NORTH AMERICAN AVIATION INC. SPACE & INFORMATION SYSTEMS DIVISION SEAL BEACH, CALIFORNIA	
CHECKED BY T. HOLMES 4-7-67	MONITOR SYSTEM — GAS DISTRIBUTION	
APPROVED BY		
SIZE D	CODE IDENT NO. 81755	DWG NO. V14-900017
SCALE NONE	SHEET 1 OF 1	REV LTR

V14-900017 D

V14-900017 D

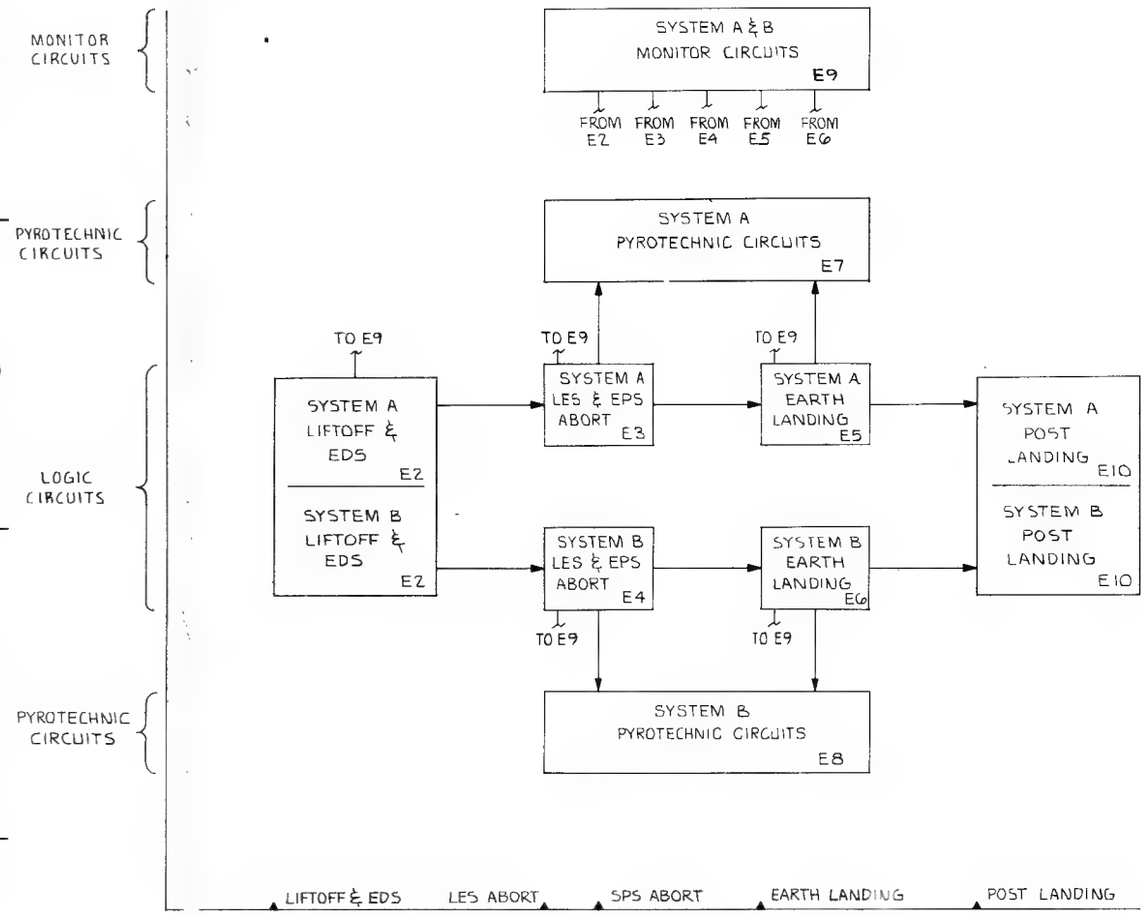

FLOW OF FUNCTIONAL INTEGRATED SYSTEMS SCHEMATICS SEQUENTIAL EVENTS CONTROL SUBSYSTEM

SECS REFERENCE DESIGNATORS

C6A1	MISSION CONTROL PROGRAMMER (MCP).
C6A2	MISSION CONTROL PROGRAMMER (MCP)
C18A1	MASTER EVENTS SEQUENCE CONTROLLER (MESC) SYSTEM A
C18A2	MASTER EVENTS SEQUENCE CONTROLLER (MESC) SYSTEM B
C19A1	REACTION CONTROL SUBSYSTEM CONTROLLER (RCSC) SYSTEM A
C19A2	REACTION CONTROL SUBSYSTEM CONTROLLER (RCSC) SYSTEM B
C20A1	EARTH LANDING SEQUENCE CONTROLLER (ELSC) SYSTEM A
C20A2	EARTH LANDING SEQUENCE CONTROLLER (ELSC) SYSTEM B
C20A4	PYRO CONTINUITY VERIFICATION BOX (PCVB)
S19A7	SM JETTISON CONTROLLER (SMJC) SYSTEM A
S19A8	SM JETTISON CONTROLLER (SMJC) SYSTEM B

E 1

DR BY	SPRINGER	2-27-66	NORTH AMERICAN AVIATION, INC. SPACE and INFORMATION SYSTEMS DIVISION 12214 LAKEWOOD BLVD DOWNEY CALIFORNIA
CHK BY	697-406	3881	
APPROVED BY			FLOW DIAGRAM AND REFERENCE DESIGNATOR
G.HOFFMAN	3-11-66		
STEVENSON	3-22-66		
SC017 SC020	DOWNEY & ETR		CODE IDENT NO 03953 · SIZE J · V14-900017
			SCALE · REV D · SHEET 2 24

V14-900017 D

V14-900017 D

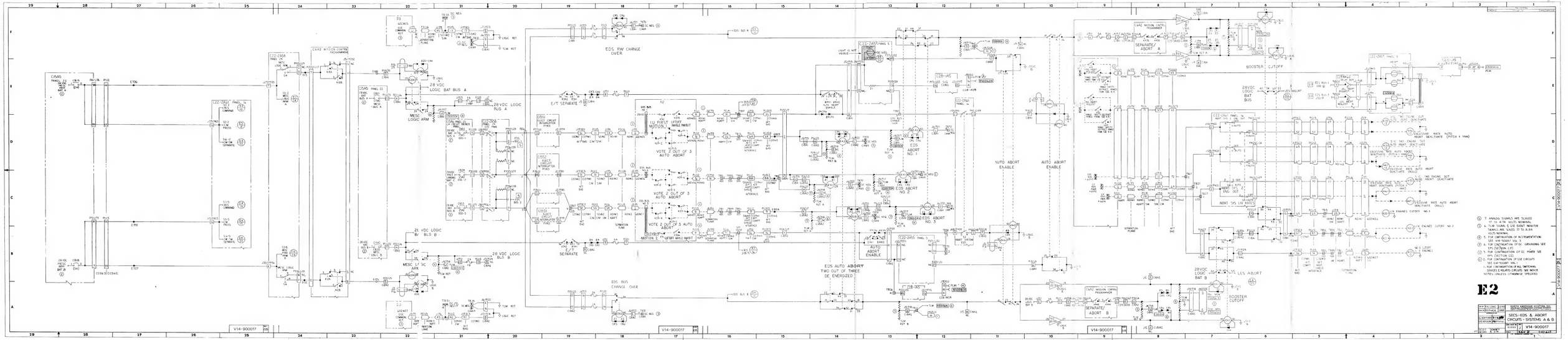

7. ANALOG SIGNALS ARE SCALED 0 TO 4.75 VOLTS NORMAL.
4. TLM SIGNAL & GSE EVENT MONITOR SIGNALS ARE SCALED 0 TO 5.05 VOLTS NORMAL.
6. FOR CONTINUATION OF INSTRUMENTATION SEE V14-900017 VOL 3.
3. FOR CONTINUATION OF DC GROUNDING SEE EPS SECTION 1.F.3.
5. FOR CONTINUATION OF DC POWER SEE EPS SECTION 1.E3.
2. FOR CONTINUATION OF GSE CIRCUITS SEE GA-900001 VOL 1.
1. FOR CONTINUATION OF ALL SWITCHING DEVICES & RELAYS CIRCUITS SEE MOVER NOTES UNLESS OTHERWISE SPECIFIED

E2

DR	R.A. LONG	2-20-67	NORTH AMERICAN AVIATION, INC. SPACE & INFORMATION SYSTEMS DIVISION
CHECKED	W. STRAUSS	2-20-67	
APPROVED	R. A. LONG	2-20-67	SECS-EDS & ABORT CIRCUITS - SYSTEMS A & B
SUPERVISOR	J. W. CLARK	2-20-67	
REVISIONS	REV. LTR.		SIZE D
			CODE IDENT NO. 61018
			V14-900017
			SHEET 2 OF 4
			SCALE NONE

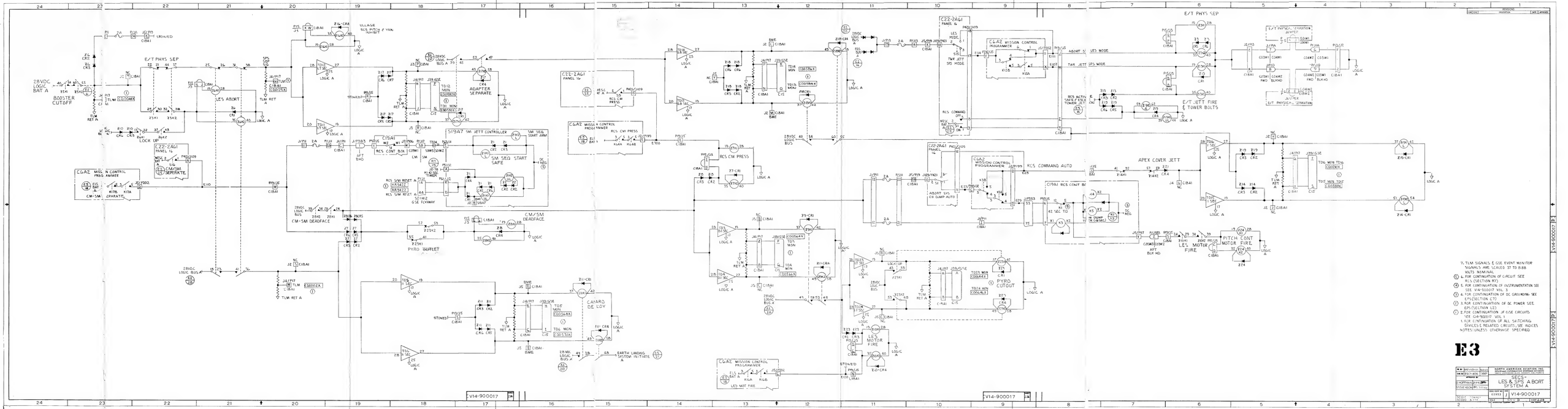

7. TLM SIGNALS & GSE EVENT MONITOR SIGNALS ARE ON RELAYS 37 TO 8.88 VOLTS NOMINAL
6. FOR CONTINUATION OF CIRCUIT SEE RCS (SECTION R7)
5. FOR CONTINUATION OF INSTRUMENTATION SEE SEE V14-900017 VOL. 3
4. FOR CONTINUATION OF DC GROUNDING SEE EPS (SECTION C7)
3. FOR CONTINUATION OF DC POWER SEE EPS (SECTION L2)
2. FOR CONTINUATION OF GSE CIRCUITS SEE GAR-900017 VOL. 1
1. FOR CONTINUATION OF ALL SWITCHING DEVICES & RELATED CIRCUITS, SEE INDICES NOTES: UNLESS OTHERWISE SPECIFIED

E3

REVISIONS		NORTH AMERICAN AVIATION, INC. SPACE DIVISION, ROCKWELL STANDARD SEAL INTERNATIONAL AIRPORT, CALIFORNIA
DRAWN BY		SEQ-SPS LES & SPS A ABORT SYSTEM A
CHECKED BY		
STRESS ENG.		SIZE D	CODE IDENT NO. 03913	DWG NO. V14-900017
SCALE NONE	SHEET 1 OF 1	

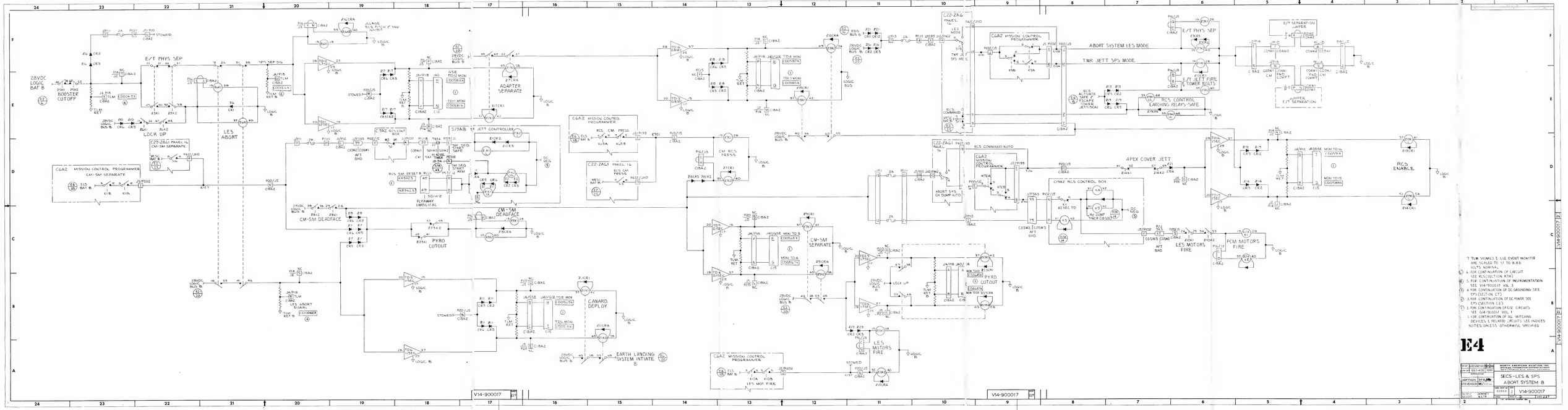

7 TLM SIGNALS & GSE EVENT MONITOR ARE SCALED TO 17 TO 8.85 VOLTS NOMINAL.
6 FOR CONTINUATION OF CIRCUIT SEE RS(SECTION RTA)
5 FOR CONTINUATION OF INSTRUMENTATION SEE V14-900017 VOL 3
4 FOR CONTINUATION OF DC GROUNDING SEE EPS (SECTION CT)
3 FOR CONTINUATION OF DC POWER SEE EPS (SECTION C3)
2 FOR CONTINUATION OF GSE CIRCUITS SEE G&A-900017 VOL 1
1 FOR CONTINUATION OF ALL SWITCHING DEVICES & RELATED CIRCUITS SEE INDICES
NOTES: UNLESS OTHERWISE SPECIFIED

E4

DR-#: 69D(4)0(1)B(1)B		NORTH AMERICAN AVIATION, INC. SPACE & INFORMATION SYSTEMS DIVISION	
DR-#: 69-7-008	SHEET		
SPECIFICATION		SECS-LES & SPS ABORT SYSTEM B	
HOFFMAN	3-6-69		
SYSTEM/SUBSYSTEM		DWG CODE IDENT NO. 81991	DWG NO. V14-900017
DESIGN	DRAWN	SCALE	SHEET 2 OF 7

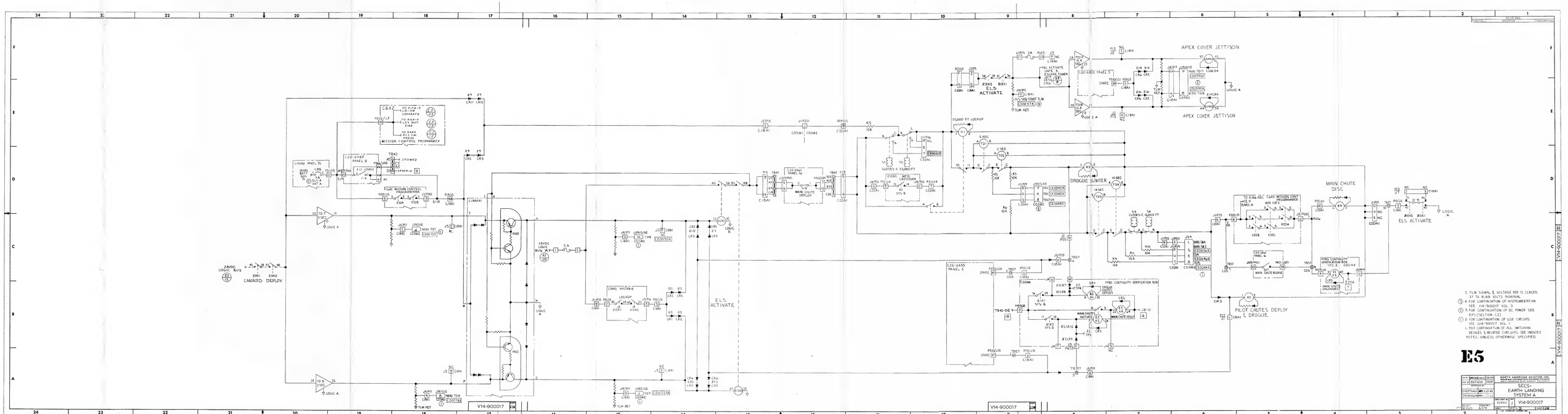

S: TLM SIGNAL & VOLTAGE REF IS SCALED 37 TO 8.88 VOLTS NOMINAL.

(1) 4: FOR CONTINUATION OF INSTRUMENTATION SEE J14-900017 VOL. 3.

(2) 3: FOR CONTINUATION OF DC POWER SEE EPS (SECTION C2).

(3) 2: FOR CONTINUATION OF GSE CIRCUITS SEE SL14-900017, VOL. 1.

1: FOR CONTINUATION OF ALL SWITCHING DEVICES & RELATED CIRCUITS SEE INDEXES NOTES UNLESS OTHERWISE SPECIFIED

E5

DR BY	BROADBANK 3-30-65	NORTH AMERICAN AVIATION, INC. SPACE AND INFORMATION SYSTEMS DIVISION	
CHK BY	DEETHOUR 3-30-65		
APPROVED BY		SECS- EARTH LANDING SYSTEM A	
CHIEF ENGR	MAY 27-65		
STRESS ENGR	MAY 27-65		
SCALE NONE	SIZE	CODE IDENT NO 01913	V14-900017
SHEET 1 OF 1	SCALE NONE		

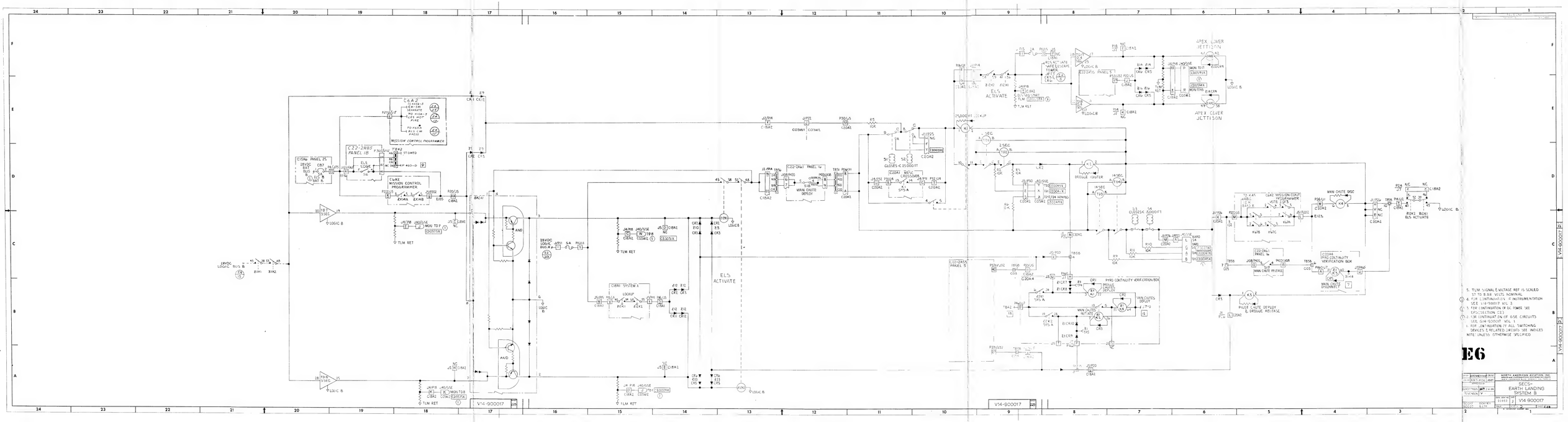

E6

DR.		NORTH AMERICAN AVIATION, INC. SPACE ADMINISTRATION DIVISION
CHECKED		SECS- EARTH LANDING SYSTEM B
DIMENSIONS		
REVISION		
SCALE	DOCNO.	REV. V14 900017

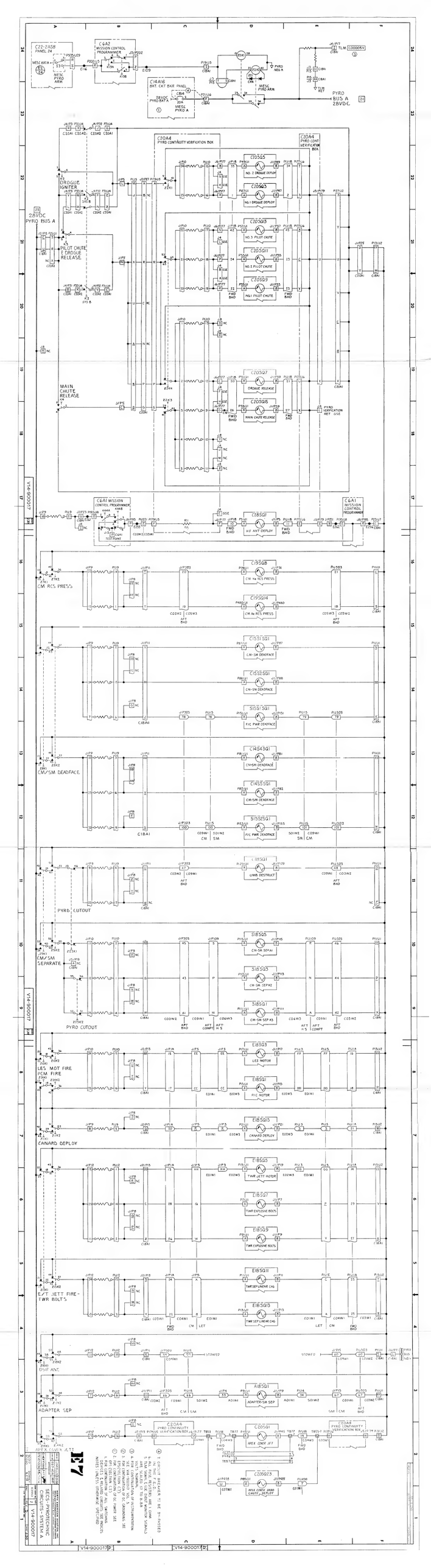
C22-2458 PANEL 24
C6A2 MISSION CONTROL PROGRAMMER
C14A16 BAT. CKT BKR PANEL
MESC PYRO ARM
MESC PYRO A
PYRO BUS A 28VDC.
C20A4 PYRO CONTINUITY VERIFICATION BOX
C20A6 PYRO CONT VERIFICATION BOX
DROGUE IGNITER & DROGUE RELEASE
PILOT CHUTE RELEASE
MAIN CHUTE RELEASE
28VDC PYRO BUS A
NO. 2 DROGUE DEPLOY
NO. 1 DROGUE DEPLOY
NO. 3 PILOT CHUTE
NO. 2 PILOT CHUTE
NO. 1 PILOT CHUTE
DROGUE RELEASE
MAIN CHUTE RELEASE
PYRO VERIFICATION RET. GSE
C6A1 MISSION CONTROL PROGRAMMER
H.F. ANT DEPLOY
CM RCS PRESS
CM-SM DEADFACE
F/C PWR DEADFACE
CM/SM DEADFACE
UMB. DESTRUCT
PYRO CUTOUT
CM-SM SEPAR.
CM/SM SEPARATE
LES MOT FIRE PCM FIRE
LES MOTOR
F/C MOTOR
CANARD DEPLOY
TWR JETT MOTOR
TWR EXPLOSIVE BOLTS
TWR SEP. LINEAR CHG
JETT FIRE-TWR BOLTS
DUST ANT.
ADAPTER SEP
ADAPTER-SM SEP
APEX COVER JETT
APEX COVER JETT
V14-900017
SECS PYROTECHNIC CIRCUITS-SYSTEM A
V14-900017

E8
4 7 CIRCUIT BREAKER TO BE BY-PASSED IN THE FIELD.
6. ALL FUSE RESISTORS ARE 1 OHM
5 TLM SIGNAL & GSE EVENT MONITOR SIGNALS ARE SCALED 37 TO 8.88 VOLTS NOMINAL
3 4. FOR CONTINUATION OF INSTRUMENTATION SEE V14-900017 VOL 3
2 3. FOR CONTINUATION OF DC GROUNDING SEE EPS (SECTION C7)
1 2. FOR CONTINUATION OF DC POWER SEE EPS (SECTION C2)
1. FOR CONTINUATION OF ALL SWITCHING DEVICES & RELATED CIRCUITS SEE INDICES
NOTES: UNLESS OTHERWISE SPECIFIED
DR BY HOSTETTER 3-1-66
CHK BY 697-406 3881
APPROVED BY
G.HOFFMAN 3-11-66
STEVENSON
SC 017 SC 020 DOWNEY & ETR
NORTH AMERICAN AVIATION, INC.
SPACE and INFORMATION SYSTEMS DIVISION
12214 LAKEWOOD BLVD DOWNEY CALIFORNIA
SECS-PYROTECHNIC CIRCUITS SYSTEM B
CODE IDENT NO 03953
SIZE J
V14-900017
SCALE
REV D
SHEET 2.31
PYRO BUS B 28VDC
MESC PYRO ARM
PYRO CONTINUITY VERIFICATION BOX
DROGUE DEPLOY
DROGUE RELEASE
MAIN CHUTE DEPLOY
MAIN CHUTE DISCONNECT
PYRO CUTOUT
CM RCS PRESSURE
CM/SM DEADFACE
CM/SM SEPARATE
LES MOT FIRE
PCM MOT FIRE
CANARD DEPLOY
E/T JETT FIRE
TWR BOLTS
DSIF ANT
ADAPTER SEP
APEX COVER JETT
AFT BULKHEAD
FWD BULKHEAD
V14-900017

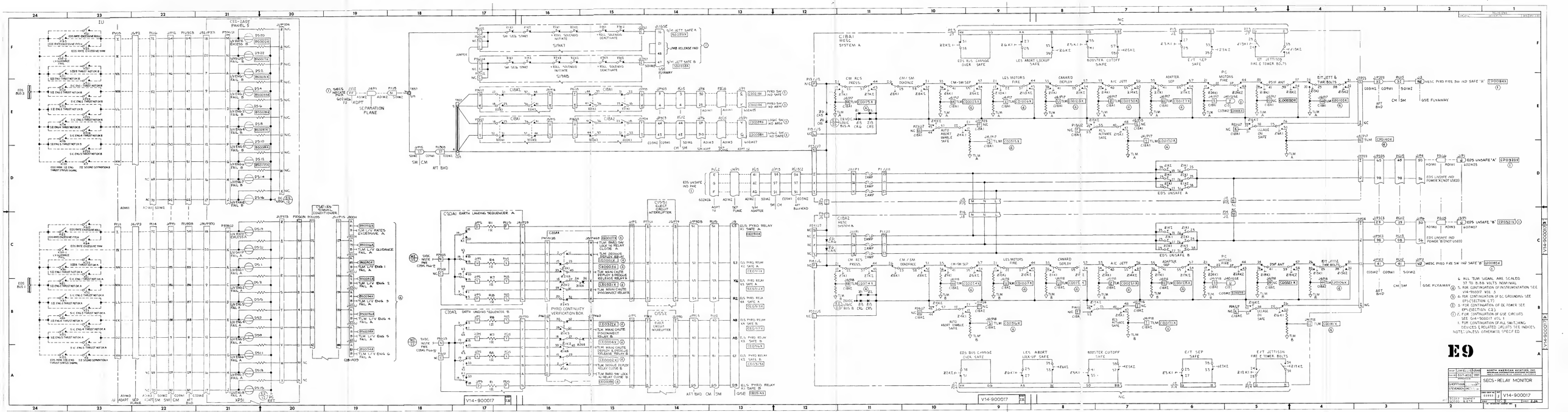
IU
CSM
GSE
SEPARATION PLANE
CSM/LM
CIBA1 MISC SYSTEM A
CIBA2 MISC SYSTEM B
C10A1 EARTH LANDING SEQUENCER A
C10A2 EARTH LANDING SEQUENCER B
PYRO CONTINUITY VERIFICATION BOX
C15A1 ELECT CIRCUIT INTERRUPTER
C15A2 ELECT CIRCUIT INTERRUPTER
EDS BUS CHANGE OVER SAFE
LES ABORT LOCKUP SAFE
BOOSTER CUTOFF SAFE
E/T SEP SAFE
E/T JETTISON FIRE 2 TOWER BOLTS
EDS UNSAFE A
EDS UNSAFE B
V14-900017
E9
NORTH AMERICAN AVIATION, INC.
SPACE AND INFORMATION SYSTEMS DIVISION
SECS-RELAY MONITOR
V14-900017

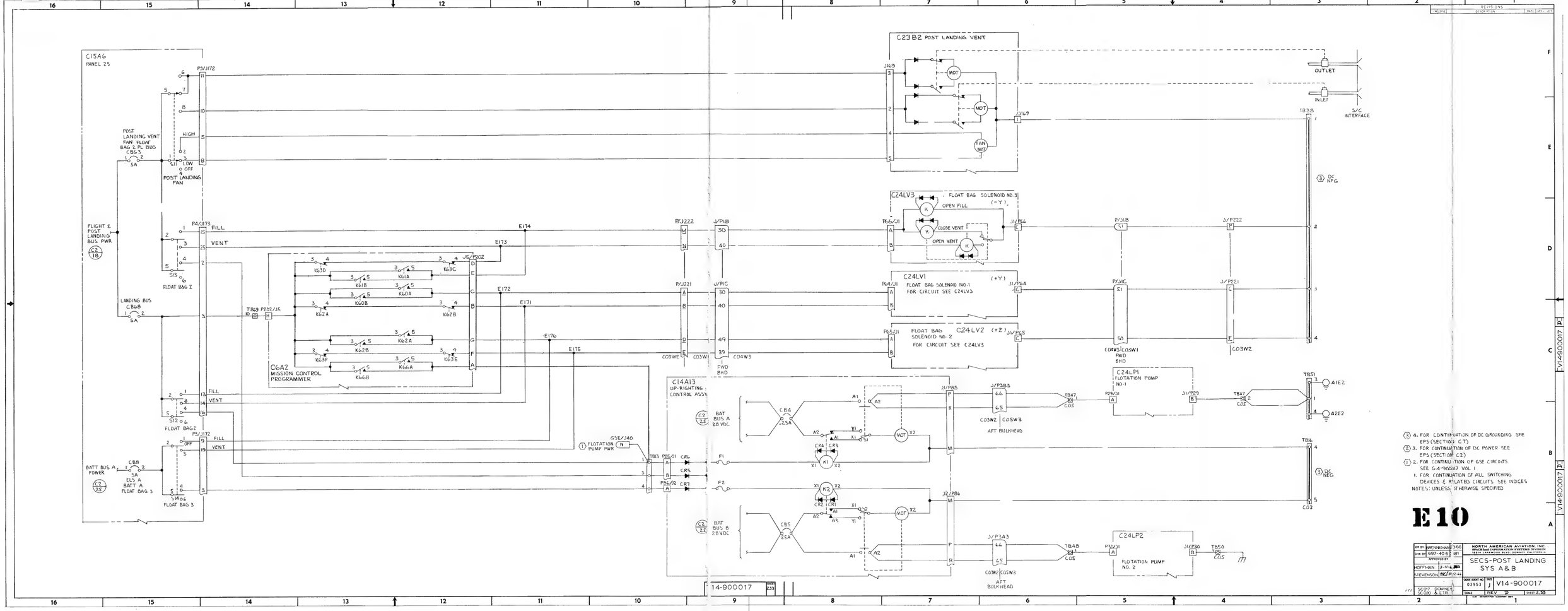
C15A6
PANEL 25
POST LANDING VENT FAN FLOAT BAG 2 PL BUS CB6A3
POST LANDING FAN
FLIGHT & POST LANDING BUS PWR
FLOAT BAG 2
LANDING BUS CB6B
C6A2
MISSION CONTROL PROGRAMMER
FLOAT BAG2
BATT BUS A POWER
BATT A FLOAT BAG 3
FLOAT BAG 3
C23B2 POST LANDING VENT
OUTLET
INLET
S/C INTERFACE
DC NPG
C24LV3
FLOAT BAG SOLENOID NO.3 (-Y)
OPEN FILL
CLOSE VENT
OPEN VENT
C24LV1
FLOAT BAG SOLENOID NO.1 (+Y)
FOR CIRCUIT SEE C24LV3
C24LV2
FLOAT BAG SOLENOID NO. 2 (+Z)
FOR CIRCUIT SEE C24LV3
FWD BHD
C14A13
UP-RIGHTING CONTROL ASSY
BAT BUS A 28 VDC
BAT BUS B 28VDC
FLOTATION PUMP PWR
C24LP1
FLOTATION PUMP NO.1
C24LP2
FLOTATION PUMP NO. 2
AFT BULKHEAD
DC NEG
A1E2
A2E2
E10
4. FOR CONTINUATION OF DC GROUNDING SEE EPS (SECTION C7)
3. FOR CONTINUATION OF DC POWER SEE EPS (SECTION C2)
2. FOR CONTINUATION OF GSE CIRCUITS SEE G4-900017 VOL. I
1. FOR CONTINUATION OF ALL SWITCHING DEVICES & RELATED CIRCUITS SEE INDICES
NOTES: UNLESS OTHERWISE SPECIFIED
NORTH AMERICAN AVIATION, INC.
SPACE&INFORMATION SYSTEMS DIVISION
SECS-POST LANDING SYS A&B
V14-900017
14-900017

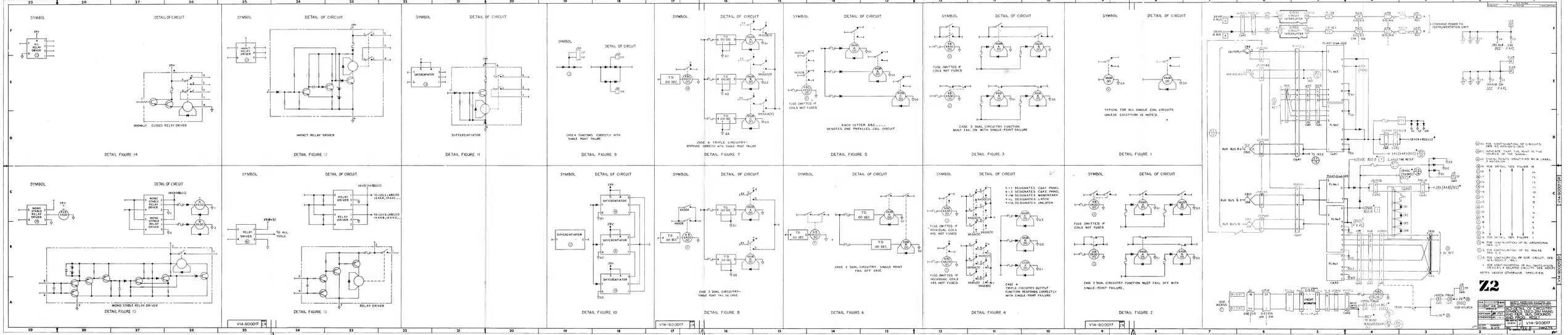
SYMBOL
DETAIL OF CIRCUIT
NORMALLY CLOSED RELAY DRIVER
DETAIL FIGURE 14
IMPACT RELAY DRIVER
DETAIL FIGURE 12
DIFFERENTIATOR
DETAIL FIGURE 11
CASE 4 FUNCTIONS CORRECTLY WITH SINGLE POINT FAILURE
DETAIL FIGURE 9
CASE 4 TRIPLE CIRCUITRY-RESPONDS CORRECTLY WITH SINGLE POINT FAILURE
DETAIL FIGURE 7
EACH LETTER A,B,C.....
DENOTES ONE PARALLEL COIL CIRCUIT
CASE 3 DUAL CIRCUITRY FUNCTION MUST FAIL ON WITH SINGLE POINT FAILURE
DETAIL FIGURE 5
FUSE OMITTED IF COILS NOT FUSED
TYPICAL FOR ALL SINGLE COIL CIRCUITS UNLESS EXCEPTION IS NOTED.
DETAIL FIGURE 1
MONO STABLE RELAY DRIVER
DETAIL FIGURE 15
RELAY DRIVER
DETAIL FIGURE 13
CASE 3 DUAL CIRCUITRY-SINGLE POINT FAIL ON CASE
DETAIL FIGURE 8
CASE 2 DUAL CIRCUITRY SINGLE POINT FAIL OFF CASE
DETAIL FIGURE 6
FUSE OMITTED IF INDIVIDUAL COILS ARE NOT FUSED
CASE 4 TRIPLE CIRCUITRY-OUTPUT FUNCTION RESPONDS CORRECTLY WITH SINGLE-POINT FAILURE
DETAIL FIGURE 4
CASE 2 DUAL CIRCUITRY FUNCTION MUST FAIL OFF WITH SINGLE-POINT FAILURE.
DETAIL FIGURE 2
COMMAND POWER TO INSTRUMENTATION UNIT
Z2
V14-900017

2 FOR CONTINUATION OF ALL SWITCHES DEVICES & RELATED CIRCUITS, SEE INDICES
1. FOR ALL FLAG NOTES ⬡ SEE Z2
NOTES: UNLESS OTHERWISE SPECIFIED
Z3
DR BY RA LONG 10/2/75
CHK BY 697-406 3881
APPROVED BY
HOFFMAN 7/16/6
STEVENSON 7-16-6
SC017 SC020 DOWNEY & ETR
NORTH AMERICAN AVIATION, INC.
SPACE and INFORMATION SYSTEMS DIVISION
12214 LAKEWOOD BLVD., DOWNEY, CALIFORNIA
ACS-LIFTOFF, LV-SC SEPARATE & ABORT LOGIC
CODE IDENT NO 03953
SIZE J
V14-900017
REV. D
SHEET 2.75

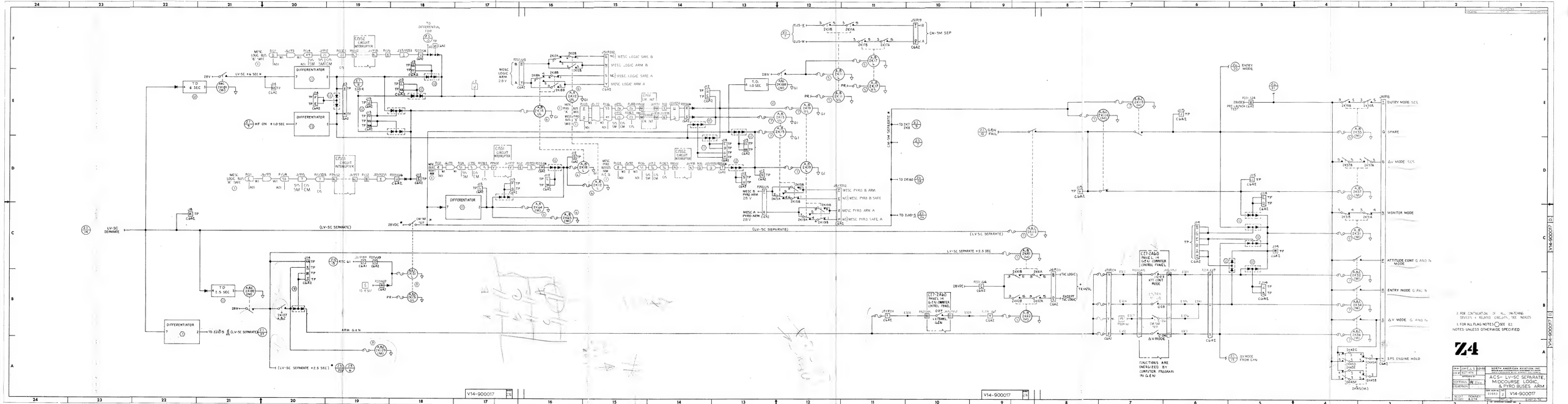
LV-SC SEPARATE
(LV-SC SEPARATE)
LV-SC SEPARATE +2.5 SEC
(LV-SC SEPARATE +2.5 SEC)
ARM G&N
MF ON +1.0 SEC
DIFFERENTIATOR
TD 6 SEC
TD 2.5 SEC
TD 1.0 SEC
CM-SM SEP
ENTRY MODE
G&N FAIL
ΔV MODE FROM G&N
ΔV MODE
FUNCTIONS ARE INITIATED BY COMPUTER PROGRAM IN G&N
SPS ENGINE HOLD
MONITOR MODE
ATTITUDE CONT G AND N
ENTRY MODE G AND N
ΔV MODE G AND N
SPARE
2. FOR CONTINUATION OF ALL CONTROL SEVERS + RELATED CIRCUITS, SEE NOTES
1. FOR ALL REAL NOTES SEE #2
NOTES UNLESS OTHERWISE SPECIFIED
Z4
NORTH AMERICAN AVIATION, INC.
SPACE & INFORMATION SYSTEMS DIVISION
ACS- LV-SC SEPARATE, MIDCOURSE LOGIC, & PYRO BUSES ARM
V14-900017
SCALE NONE
SHEET 1 OF 1

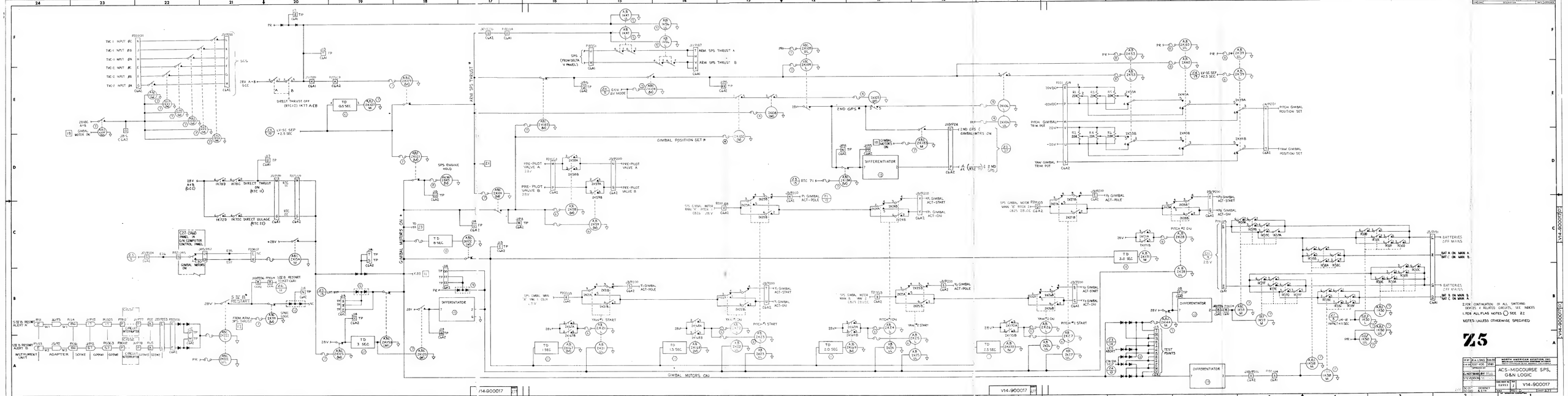

NOTES: UNLESS OTHERWISE SPECIFIED

1. FOR CONTINUATION OF ALL SWITCHING DEVICES & RELATED CIRCUITS, SEE INDEXES
2. FOR ALL FLAG NOTES ◯ SEE Z2

Z5

DR BY	B.A. LONG	2-14-62	NORTH AMERICAN AVIATION, INC. SPACE & INFORMATION SYSTEMS DIVISION, DOWNEY, CALIFORNIA
CH BY	ROY HOM	2-14-62	
APPROVED			ACS-MIDCOURSE SPS, G&N LOGIC
ALTERNATE SHEET			
REVISIONS			
SIZE	CODE IDENT NO.	DWG NO	V14-900017
D	02953		
SCALE	SHEET 1 OF 1		

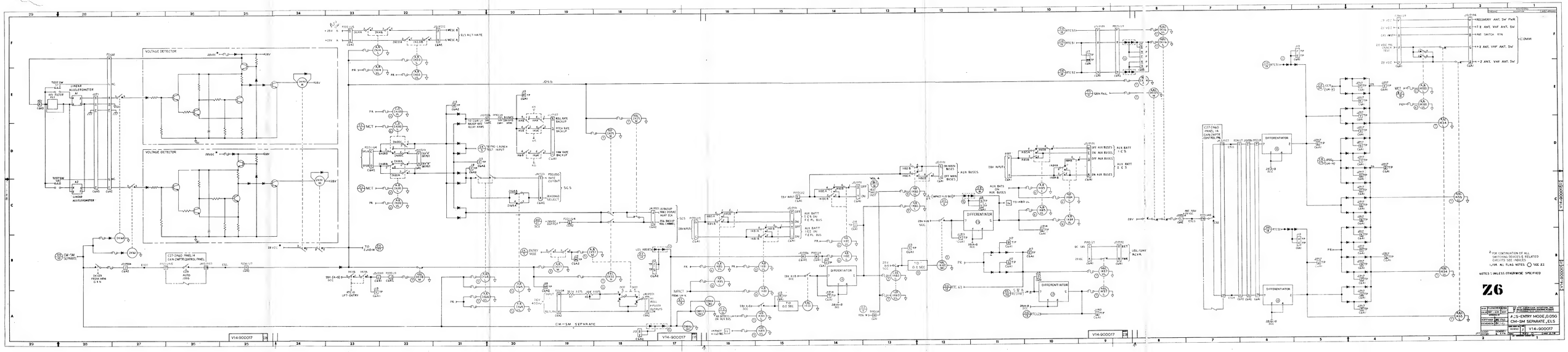
VOLTAGE DETECTOR
VOLTAGE DETECTOR
LINEAR ACCELEROMETER
CM-SM SEPARATE
CM-SM SEPARATE
.050
TO 0.3 SEC
TO 0.5 SEC
DIFFERENTIATOR
C27-2460 PANEL 14 GEN CMPTR CONTROL PANEL
+RECOVERY ANT. SW PWR
+Z ANT. VHF ANT. SW
PAT SWITCH KIN
+Z ANT. VHF ANT. SW
-Z ANT. VHF ANT. SW
COMM
FOR CONTINUATION OF ALL SWITCHING DEVICES & RELATED CIRCUITS SEE INDICES
LEGEND: ALL FLAG NOTES SEE Z2
NOTES: UNLESS OTHERWISE SPECIFIED
Z6
4.5-ENTRY MODE, 0.050
CM-SM SEPARATE, ELS
V14-900017

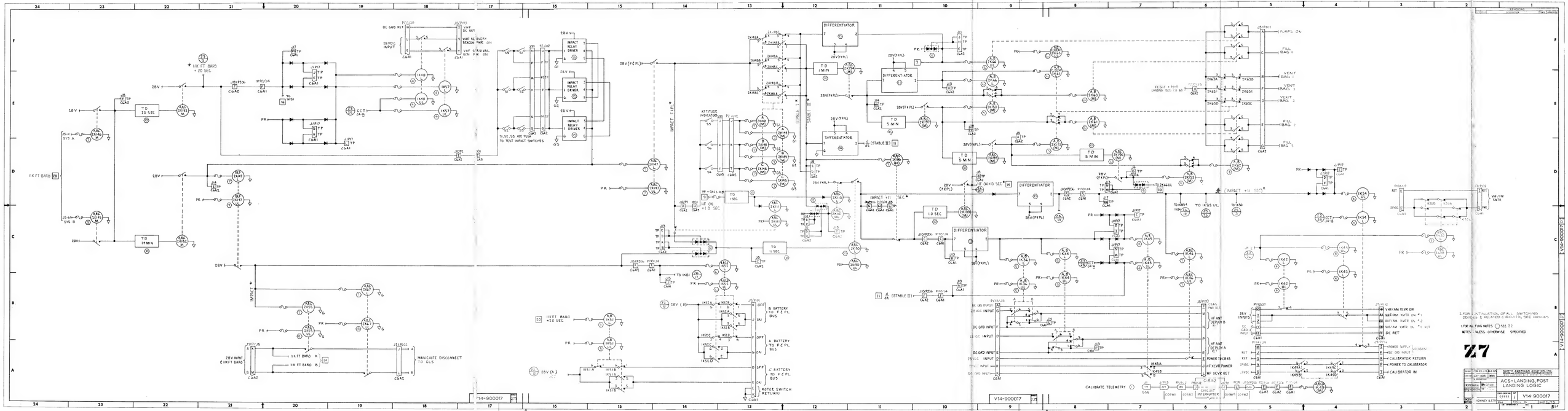
ACS-LANDING POST LANDING LOGIC
V14-900017
NORTH AMERICAN AVIATION, INC.
SPACE AND INFORMATION SYSTEMS DIVISION
DIFFERENTIATOR
TD 1 MIN
TD 5 MIN
TD 10 SEC
TD 1 SEC
TD 14 MIN
IMPACT RELAY I DRIVER
VHF/FM XMTR
PUMPS ON
FILL BAG 1
VENT BAG 1
VENT BAG 2
FILL BAG 2
VHF/AM RCVR ON
VHF/AM XMTR ON #1
VHF/AM XMTR ON #2
VHF/AM XMTR ON #1 KEY
DC RET
POWER SUPPLY
DC GRD INPUT
CALIBRATOR RETURN
POWER TO CALIBRATOR
CALIBRATOR IN
CALIBRATE TELEMETRY
MAIN CHUTE DISCONNECT TO ELS
A BATTERY TO F C PL BUS
B BATTERY TO F C PL BUS
C BATTERY TO F C PL BUS
MOTOR SWITCH RETURN
2. FOR LIST NUMBERS OF ALL SWITCH NO. DEVICES & RELATED CIRCUITRY, SEE INDICES
FLAG NOTES ◯ SEE 32
NOTES UNLESS OTHERWISE SPECIFIED
Z7

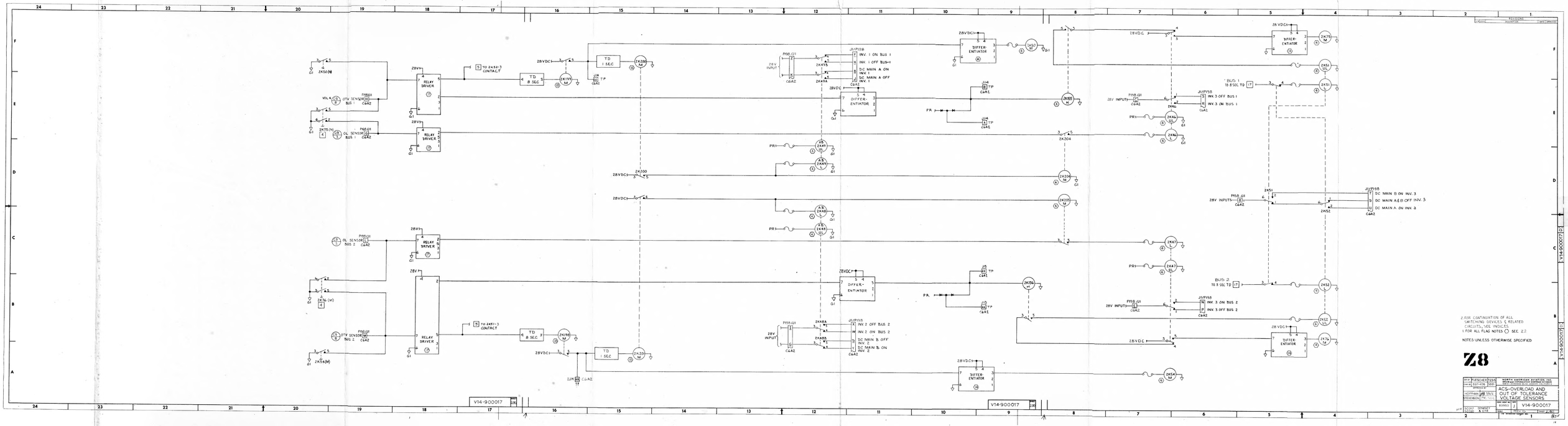
28V
RELAY DRIVER
TO 2K51-3 CONTACT
TO 2K51-3 CONTACT
TD 8 SEC
TD 1 SEC
28VDC
DIFFER-ENTIATOR
OTY SENSOR BUS 1
OL SENSOR BUS 1
OL SENSOR BUS 2
OTY SENSOR BUS 2
PR
INV. 1 ON BUS 1
INV. 1 OFF BUS 1
DC MAIN A ON INV. 1
DC MAIN A OFF INV. 1
INV. 2 OFF BUS 2
INV. 2 ON BUS 2
DC MAIN B OFF INV. 2
DC MAIN B ON INV. 2
INV. 3 OFF BUS 1
INV. 3 ON BUS 1
BUS 1 10.8 SEC TO
BUS 2 10.9 SEC TO
INV. 3 ON BUS 2
INV. 3 OFF BUS 2
DC MAIN B ON INV. 3
DC MAIN A & B OFF INV. 3
DC MAIN A ON INV. 3
V14-900017
Z8
ACS-OVERLOAD AND OUT OF TOLERANCE VOLTAGE SENSORS
V14-900017
NORTH AMERICAN AVIATION INC.
SPACE & INFORMATION SYSTEMS DIVISION
SEAL INTERNAL & EXTER
SCALE 1 = 1
SHEET 1 OF 1
2. FOR CONTINUATION OF ALL SWITCHING DEVICES & RELATED CIRCUITS, SEE INDICES.
1. FOR ALL FLAG NOTES ⓪ SEE Z2
NOTES: UNLESS OTHERWISE SPECIFIED

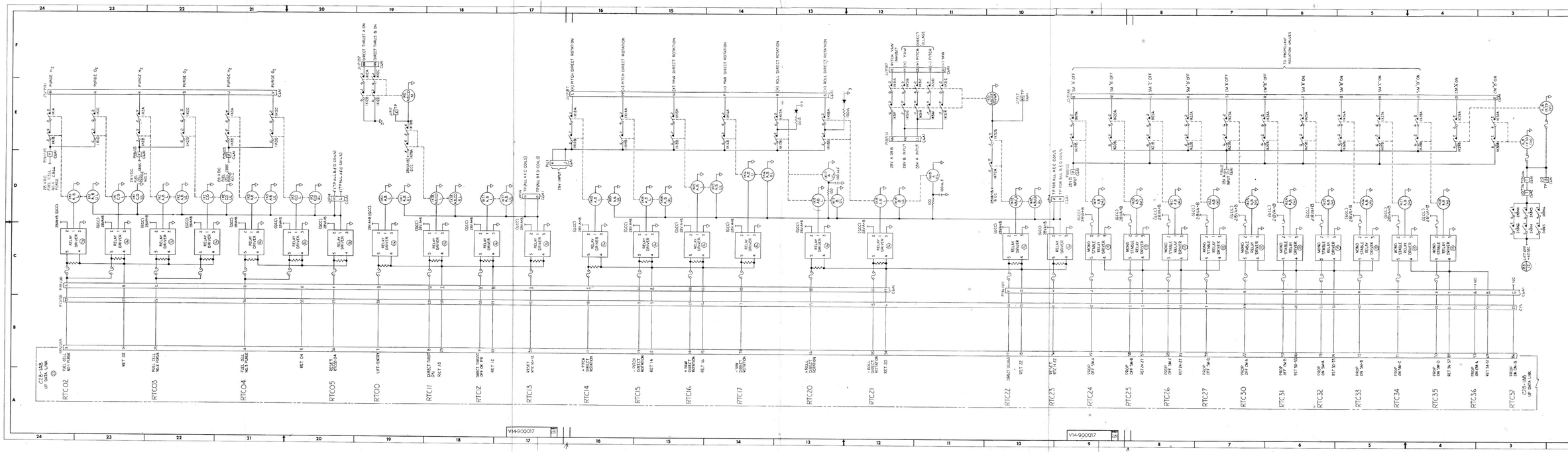

2 FOR CONTINUATION OF ALL SWITCHING DEVICES & RELATED CIRCUITS SEE INDICES
1 FOR ALL FLAG NOTES ○ SEE 3.2

NOTES UNLESS OTHERWISE SPECIFIED

Z9

REV	DATE	CHANGE NO.	

NORTH AMERICAN AVIATION, INC.
SPACE AND INFORMATION SYSTEMS DIVISION
SEAL BEACH, CALIFORNIA

ACS-REAL
TIME COMMANDS
BTC 02-37

CODE IDENT NO. 03951 | SIZE J | V14-900017

SCALE NONE | SHEET 1 OF 1

The North American Rockwell Corp.

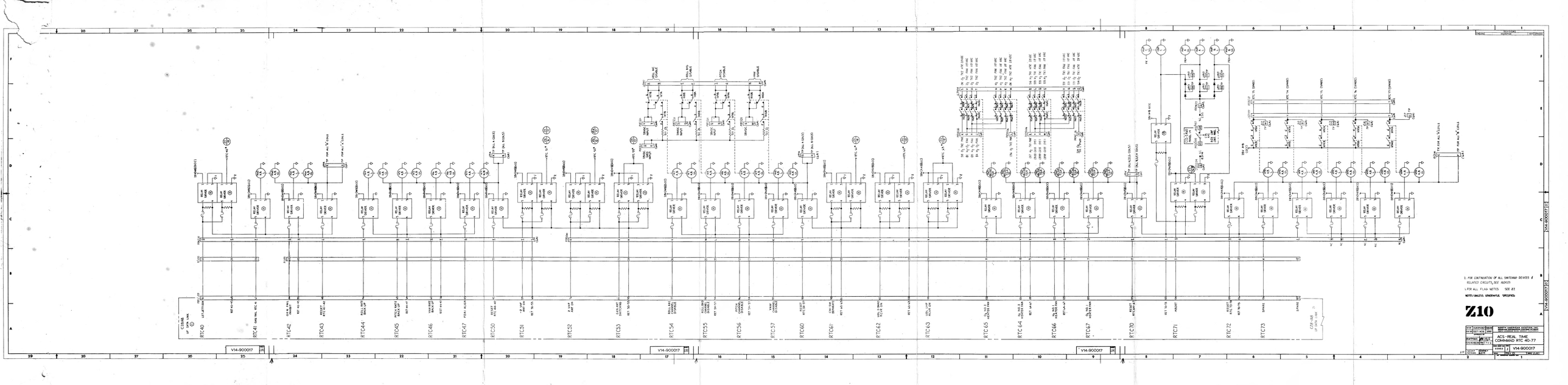
1. FOR CONTINUATION OF ALL SWITCHING DEVICES & RELATED CIRCUITS, SEE ADP275
2. FOR ALL FLAG NOTES, SEE #2
NOTE: UNLESS OTHERWISE SPECIFIED
Z10
NORTH AMERICAN AVIATION, INC.
SPACE & INFORMATION SYSTEMS DIVISION
ACS-REAL TIME COMMAND RTC 40-77
V14-900017
SCALE NONE
SHEET 1 OF 1
V14-900017
V14-900017
V14-900017

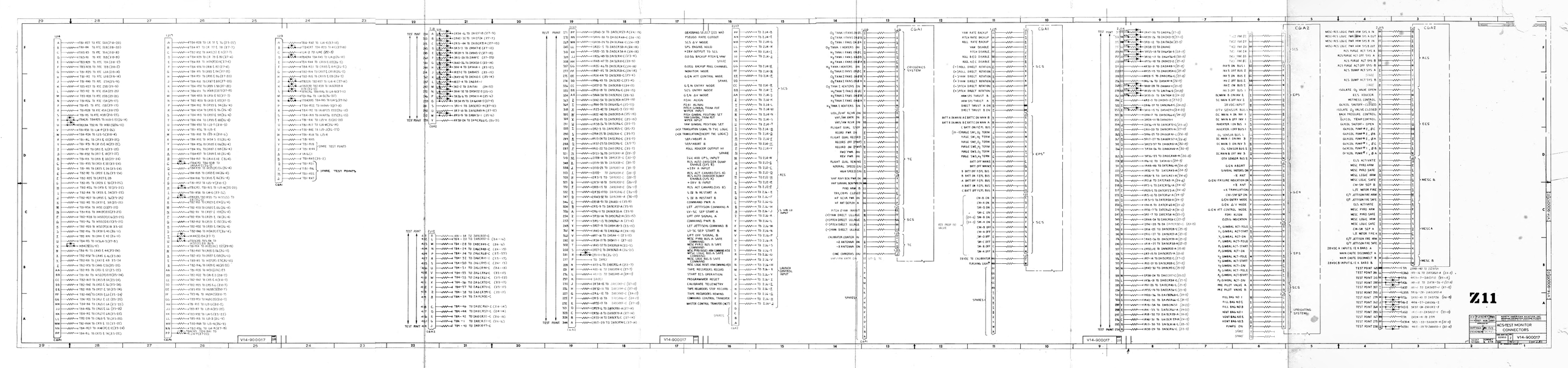
Z11
ACS/EST MONITOR CONNECTORS
V14-900017
CGA1
CGA2
ACS
EPS
ECS
MESC B
MESC A
GEN
SCS
TC
CRYOGENICS SYSTEM
OPERATING SYSTEM
SPARE TEST POINTS
TEST POINT
SPARES